SWT 8GUU NB

Linear bushing

TYPE: Shaft guidance systems, Linear bushing, With flange, Oval type, Type SWT, American standard, Plastic cage (NB)

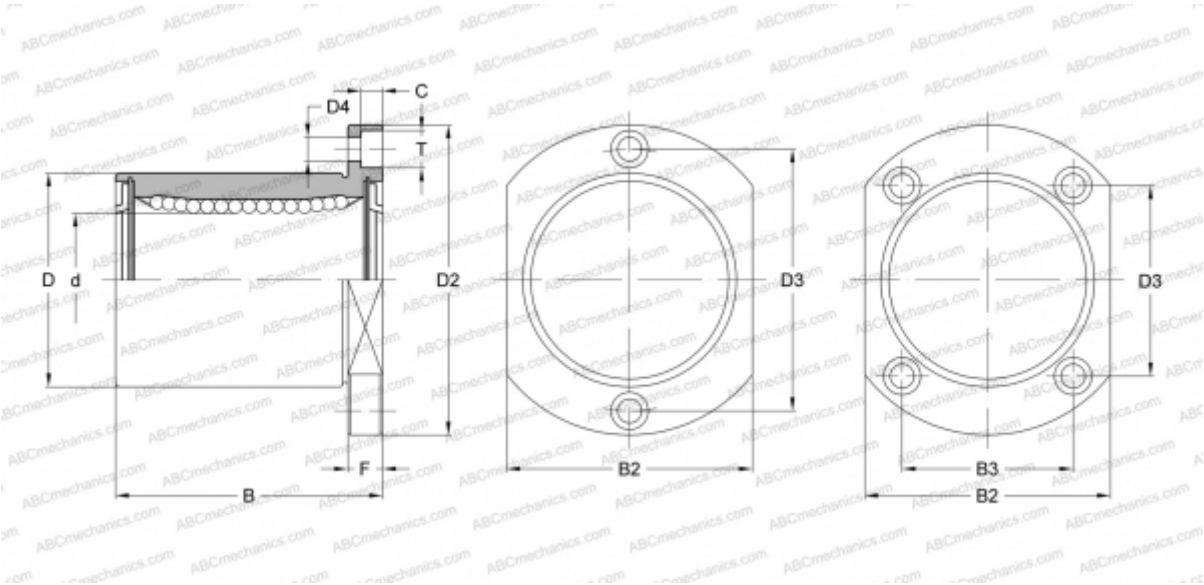

Technical specification

DIMENSIONS, MM	
d	12,700
D	22,225
B	31,750
D2	44,450
D3	28,575
D4	4,763
B2	28,575
B3	17,463
T	7,544
C	4,369
F	28.575
WEIGHT, KG	0,077
MANUFACTURER	NB