SWT10GUU NB

Linear bushing

TYPE: Shaft guidance systems, Linear bushing, With flange, Oval type, Type SWT, American standard, Plastic cage (NB)

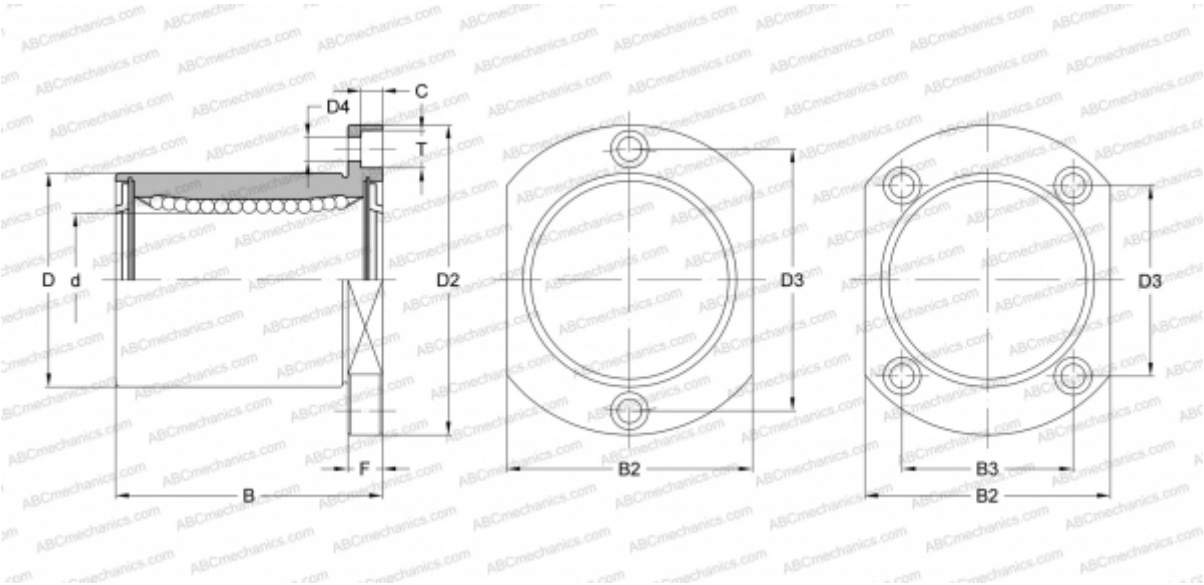

Technical specification

DIMENSIONS, MM	
d	15,875
D	28,575
B	38,100
D2	50,800
D3	34,925
D4	4,763
B2	34,925
B3	23,813
T	7,544
C	4,369
F	34.925
WEIGHT, KG	0,125
MANUFACTURER	NB