SWST16UU NB

Linear bushing

TYPE: Shaft guidance systems, Linear bushing, With flange, Oval type, Type SWT, American standard, Corrosion resistance, Stainless steel cage (NB)

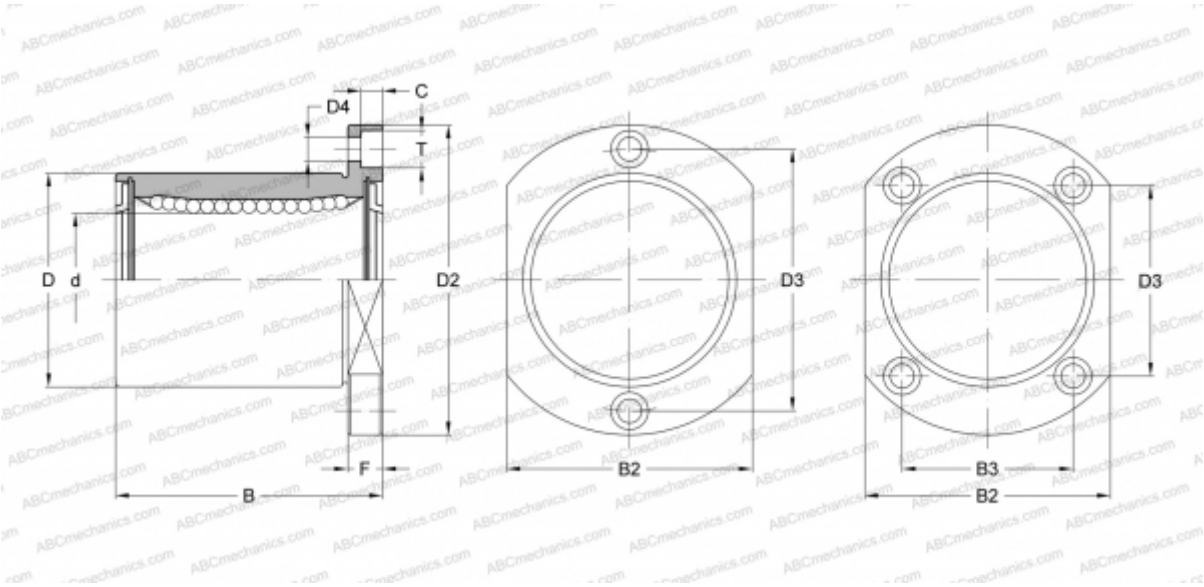

Technical specification

DIMENSIONS, MM	
d	25,400
D	39,688
B	57,150
D2	63,500
D3	47,625
D4	5,555
B2	47,625
B3	33,338
T	8,738
C	5,156
F	47.625
WEIGHT, KG	0,293
MANUFACTURER	NB