SWST20UU NB

Linear bushing

TYPE: Shaft guidance systems, Linear bushing, With flange, Oval type, Type SWT, American standard, Corrosion resistance, Stainless steel cage (NB)

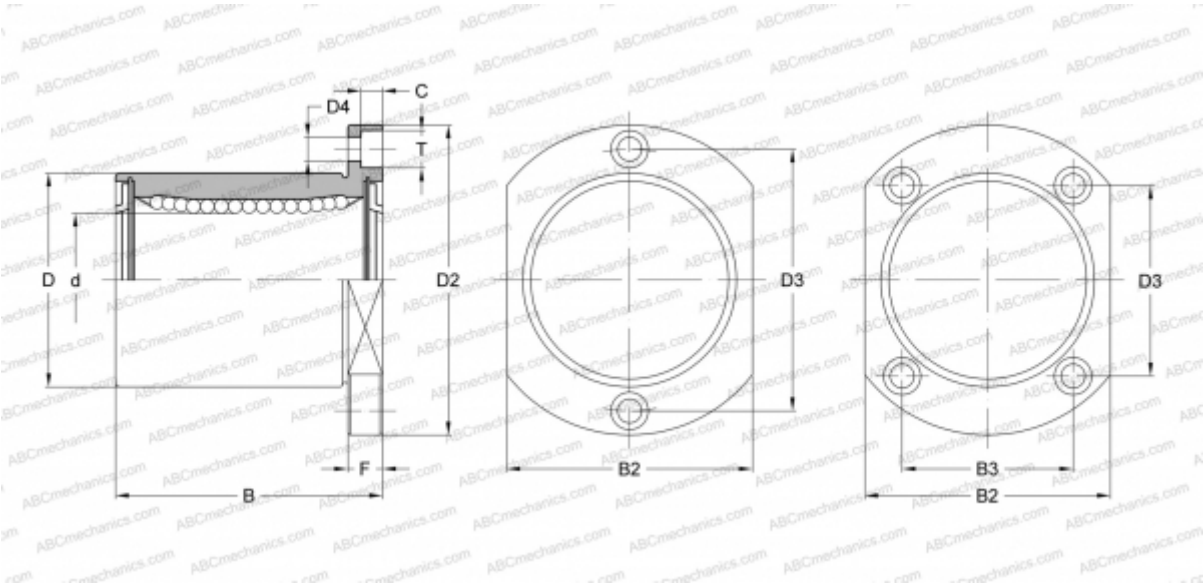

Technical specification

DIMENSIONS, MM	
d	31,750
D	50,800
B	66,675
D2	79,375
D3	60,325
D4	7,142
B2	60,325
B3	44,450
T	10,312
C	6,746
F	60.325
WEIGHT, KG	0,586
MANUFACTURER	NB