AK 25GWUU NB

Linear bushing, case unit

TYPE: Shaft guidance systems, Linear bushing, case unit, Close type, Double-wide block type, Type AK..W, compact (NB)

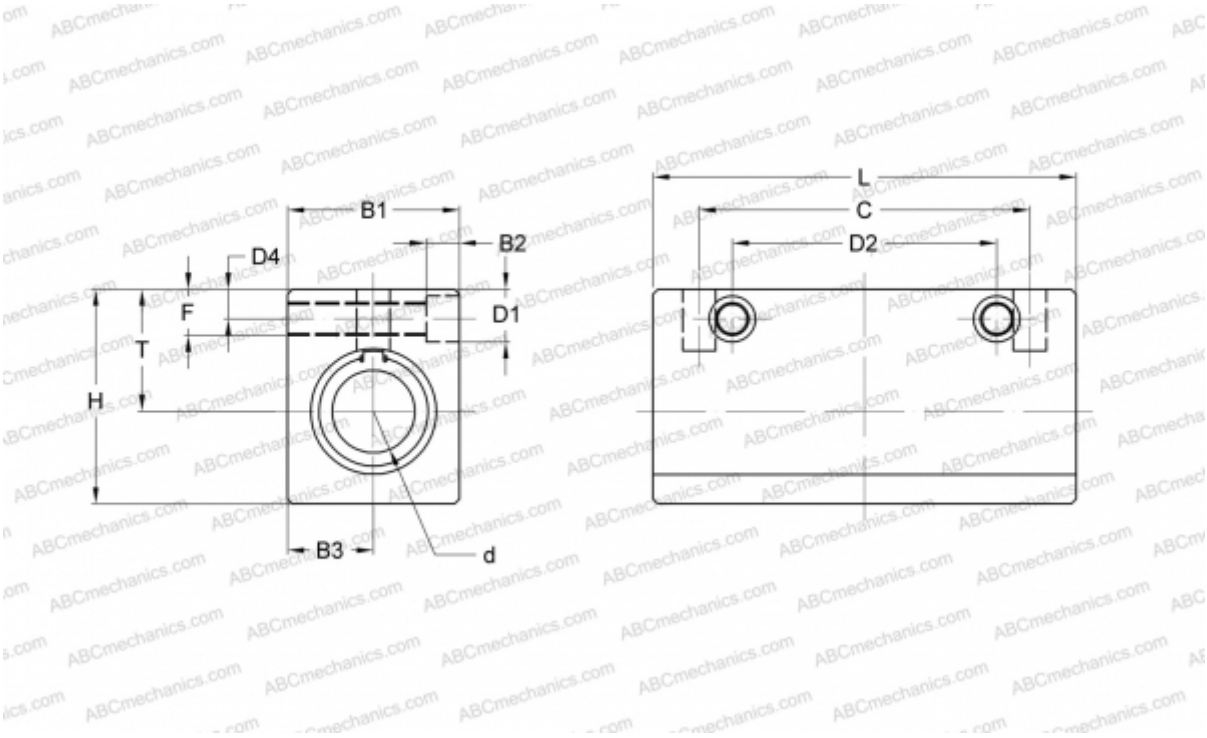

Technical specification

DIMENSIONS, MM	
B1	52,000
H	65,000
L	128,000
d	25,000
D1	14,000
D2	100,000
D4	9,000
B2	10,000
B3	26,000
T	37,000
C	80,000
c	100
F	17

WEIGHT, KG	1,120
MANUFACTURER	NB