SMT 25UU-E NB

Linear bushing

TYPE: Shaft guidance systems, Linear bushing, Pilot flange location, Oval type, Type SMT..E, Asian standard, Steel cage (NB)

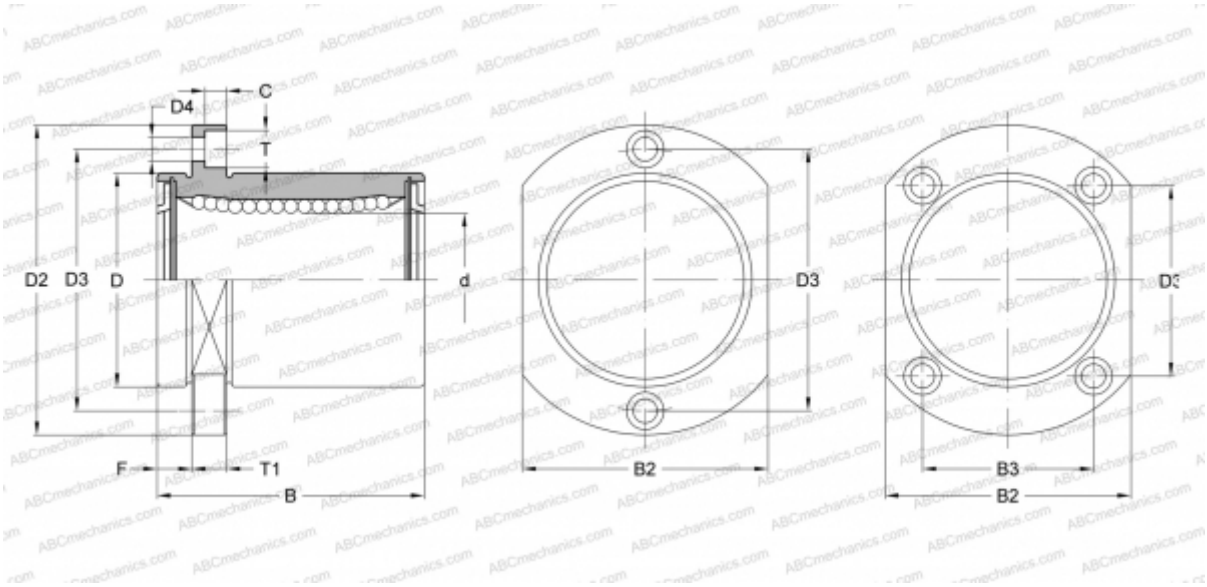

Technical specification

DIMENSIONS, MM	
d	25,000
D	40,000
B	59,000
D2	62,000
D3	40,000
D4	5,500
B2	46,000
B3	32,000
T	9,000
T1	8,000
F	8
WEIGHT, KG	0,325
MANUFACTURER	NB