SMT 6GUU-E NB

Linear bushing

TYPE: Shaft guidance systems, Linear bushing, Pilot flange location, Oval type, Type SMT..E, Asian standard, Plastic cage (NB)

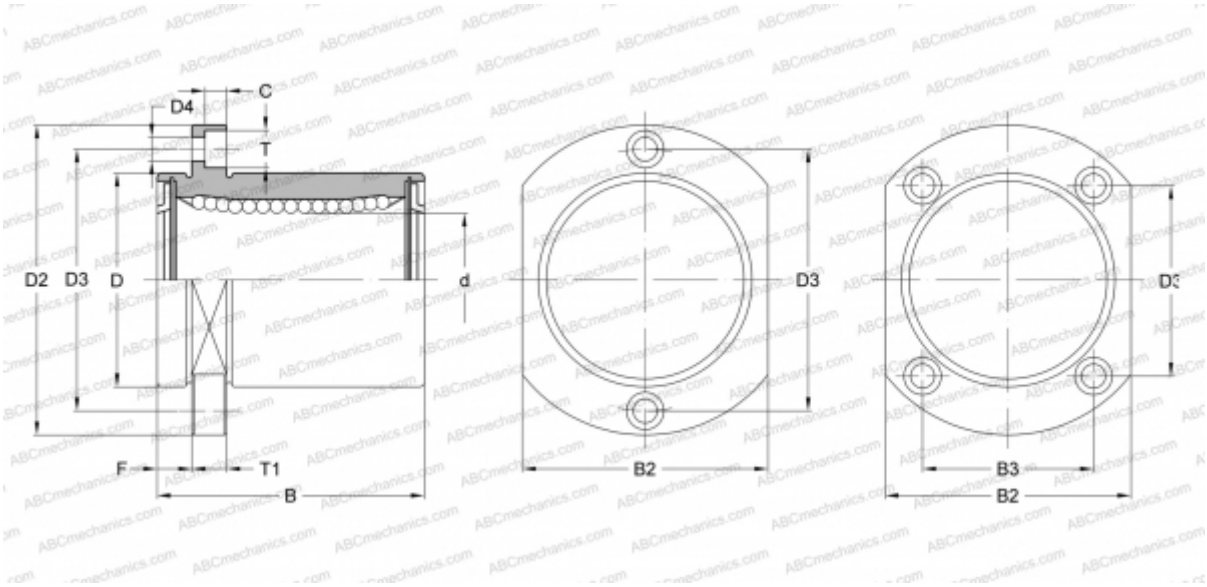

Technical specification

DIMENSIONS, MM	
d	6,000
D	12,000
B	19,000
D2	28,000
D3	20,000
D4	3,500
B2	18,000
T	6,000
T1	5,000
F	5
WEIGHT, KG	0,021
MANUFACTURER	NB