SWFC 6G NB

Linear bushing

TYPE: Shaft guidance systems, Linear bushing, Middle flange location, Circular type, Type SWFC, American standard, Plastic cage (NB)

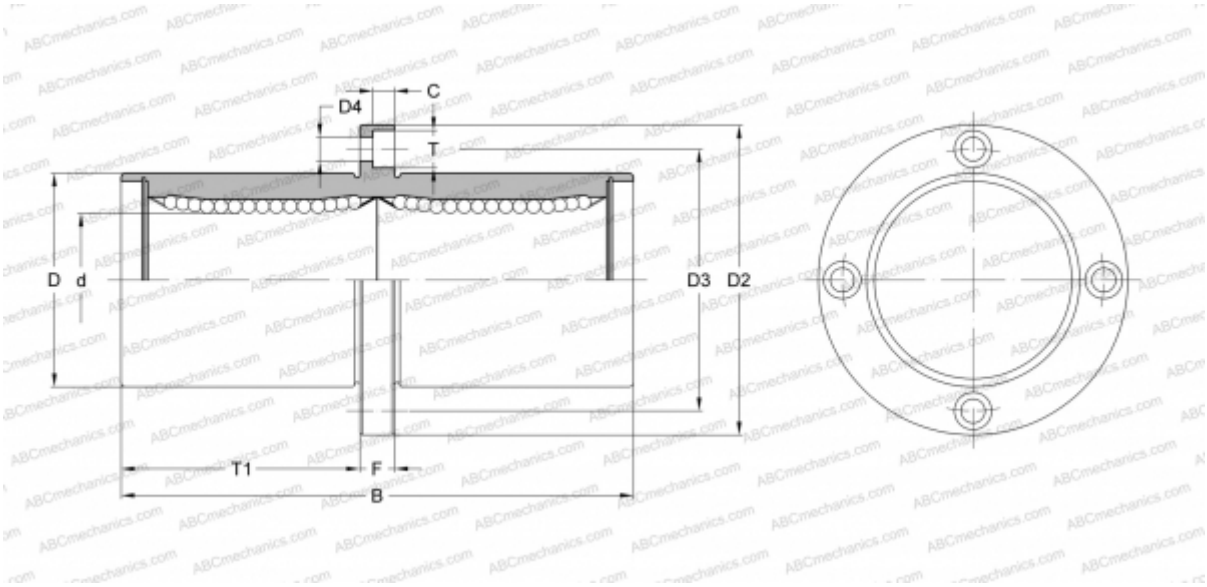

Technical specification

DIMENSIONS, MM	
d	9,525
D	15,875
B	40,481
D2	38,100
D3	26,988
D4	4,763
T	7,541
T1	17,066
C	4,366
F	6.35
WEIGHT, KG	0,060
MANUFACTURER	NB