SWSFC 8G NB

Linear bushing

TYPE: Shaft guidance systems, Linear bushing, Middle flange location, Circular type, Type SWFC, American standard, Corrosion resistance, Plastic cage (NB)

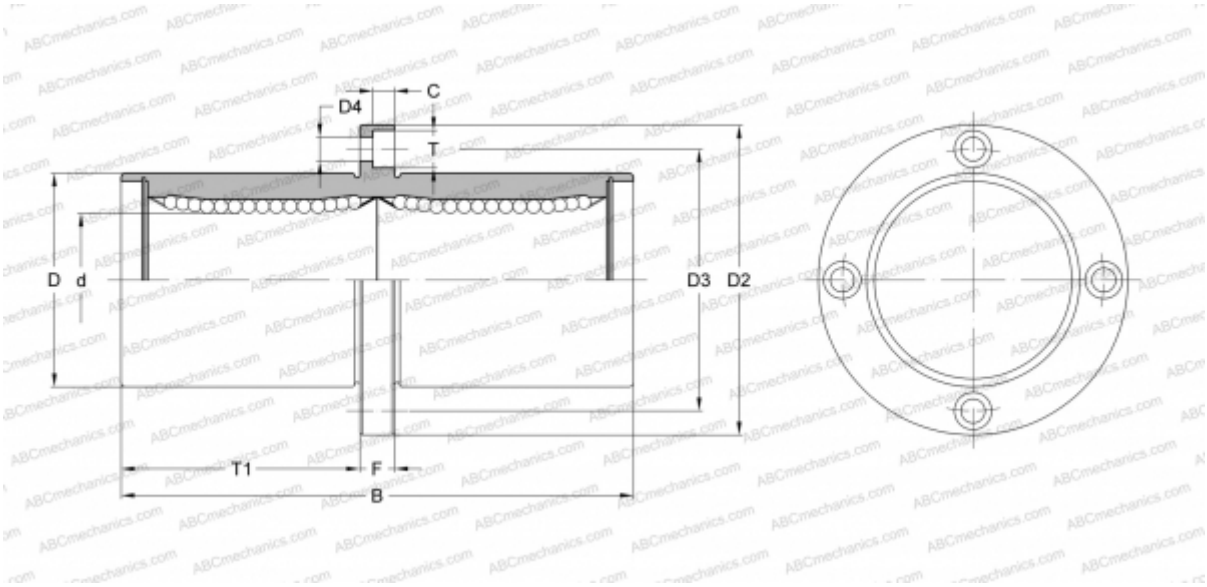

Technical specification

DIMENSIONS, MM	
d	12,700
D	22,225
B	60,325
D2	44,450
D3	33,338
D4	4,763
T	7,541
T1	26,988
C	4,366
F	6.35
WEIGHT, KG	0,126
MANUFACTURER	NB