SWSFC10G NB

Linear bushing

TYPE: Shaft guidance systems, Linear bushing, Middle flange location, Circular type, Type SWFC, American standard, Corrosion resistance, Plastic cage (NB)

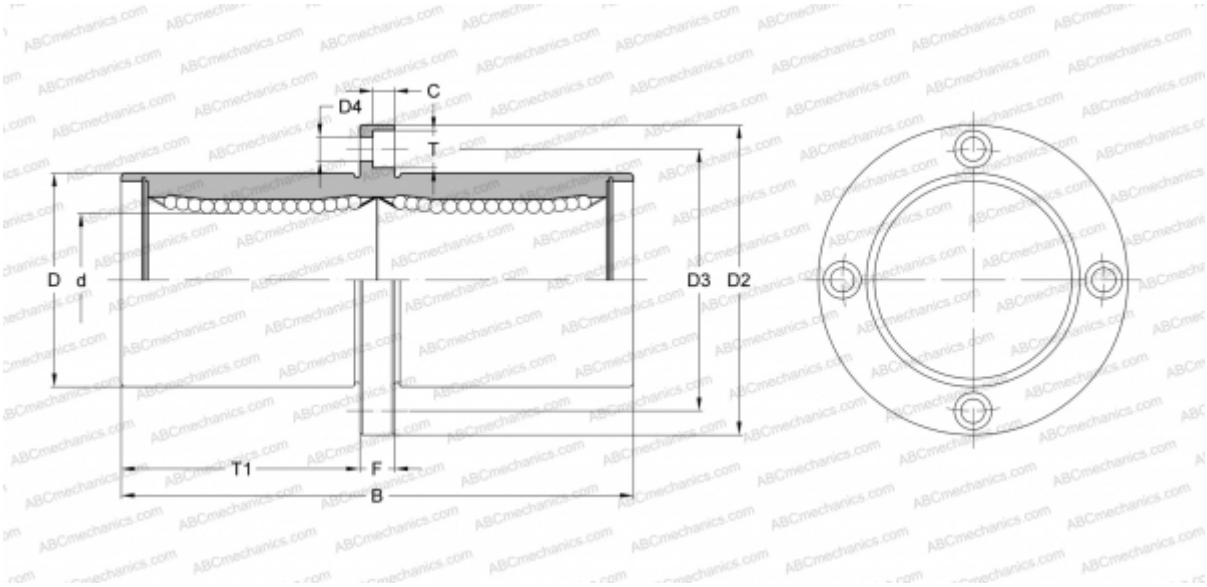

Technical specification

DIMENSIONS, MM	
d	15,875
D	28,575
B	71,438
D2	50,800
D3	39,688
D4	4,763
T	7,541
T1	32,544
C	4,366
F	6.35
WEIGHT, KG	0,215
MANUFACTURER	NB