SWSFC12G NB

Linear bushing

TYPE: Shaft guidance systems, Linear bushing, Middle flange location, Circular type, Type SWFC, American standard, Corrosion resistance, Plastic cage (NB)

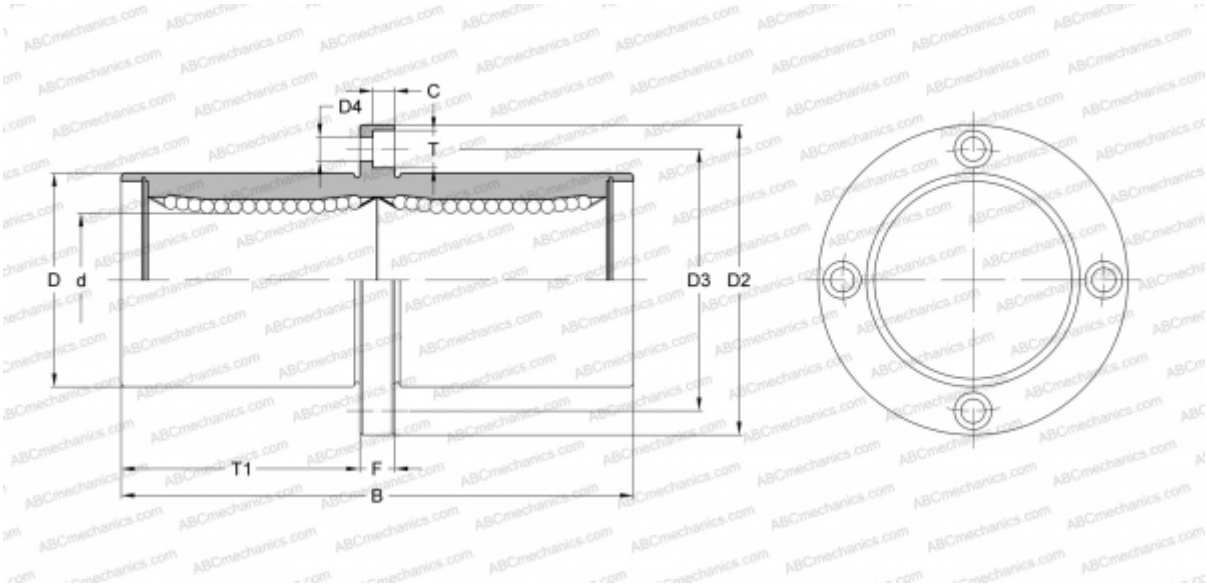

Technical specification

DIMENSIONS, MM	
d	19,050
D	31,750
B	78,581
D2	55,563
D3	43,656
D4	5,556
T	8,731
T1	35,322
C	5,159
F	7.938
WEIGHT, KG	0,280
MANUFACTURER	NB