SWSFC24G NB

Linear bushing

TYPE: Shaft guidance systems, Linear bushing, Middle flange location, Circular type, Type SWFC, American standard, Corrosion resistance, Plastic cage (NB)

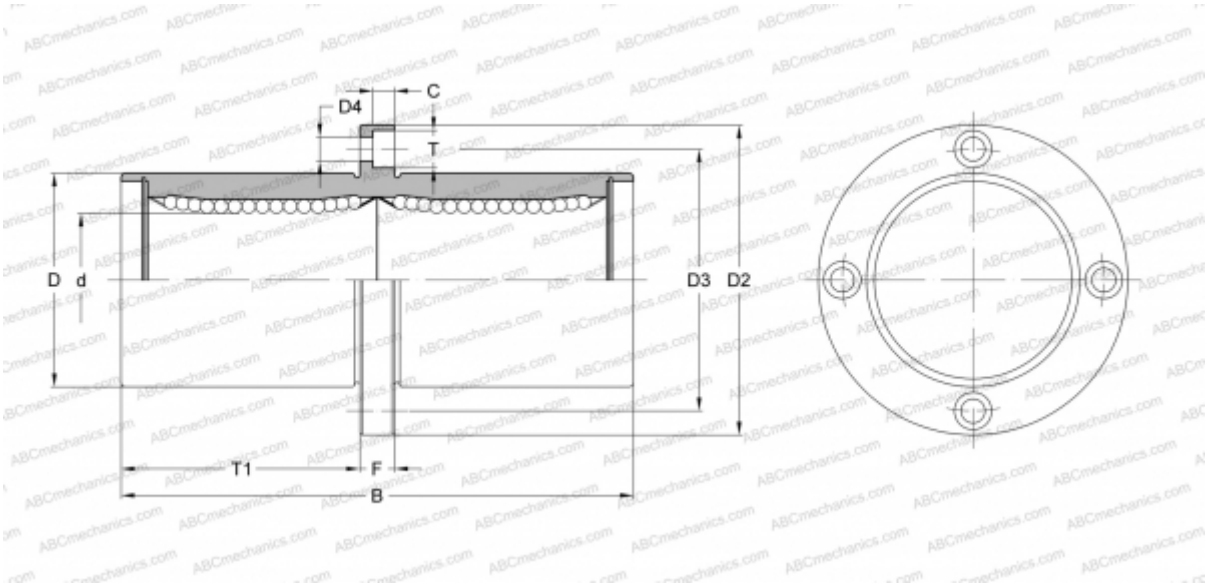

Technical specification

DIMENSIONS, MM	
d	38,100
D	60,325
B	144,463
D2	95,250
D3	77,788
D4	8,731
T	12,700
T1	65,882
C	8,334
F	12.7
WEIGHT, KG	1,630
MANUFACTURER	NB