CDS20 NB

Linear bushing, case unit

TYPE: Shaft guidance systems, Linear bushing, case unit, Open type, Clearance adjustable type, Type CD, Corrosion resistance (NB)

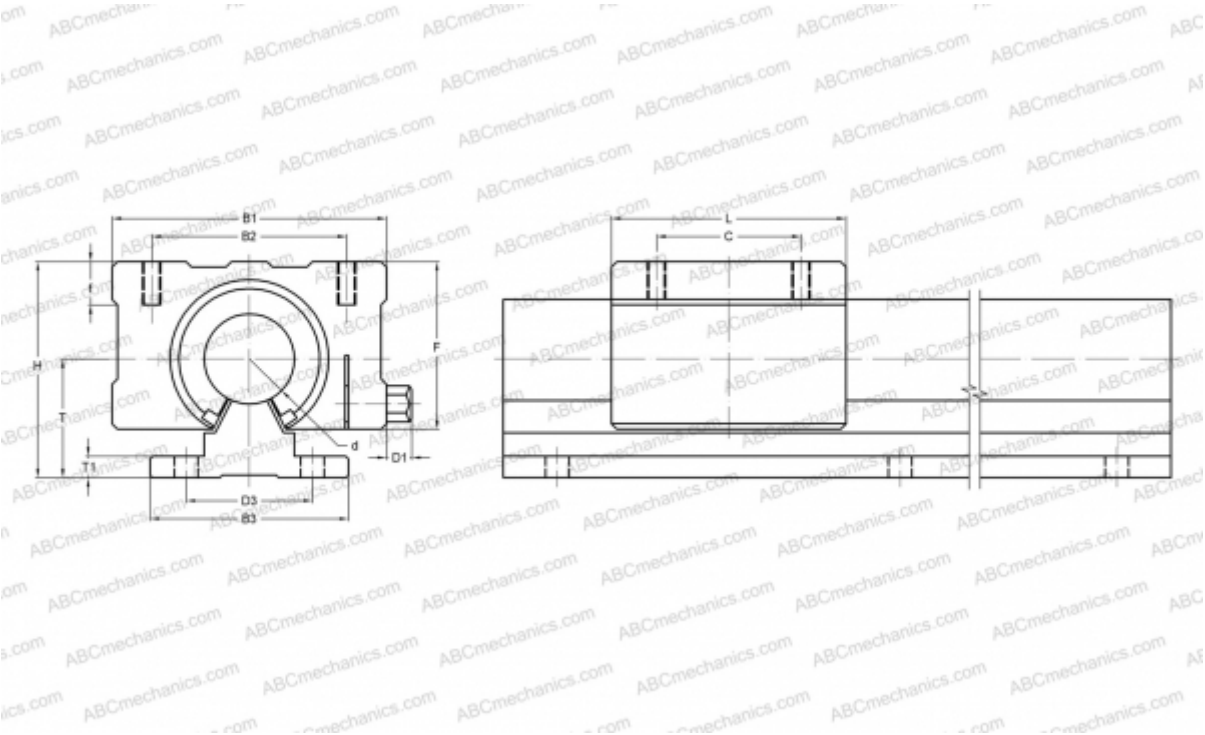

Technical specification

DIMENSIONS, MM	
B1	54,000
H	50,000
L	50,000
d	20,000
D1	7,000
D3	30,000
B2	40,000
B3	45,000
T	27,000
T1	5,000
f	11,000
C	35,000
F	39
WEIGHT, KG	0,240
MANUFACTURER	NB