# KN50-B-PP INA

Linear bushing

TYPE: Shaft guidance systems, Linear bushing, Self aligning, Close type, Type KN..B-PP, light range, sealed on both sides (INA)

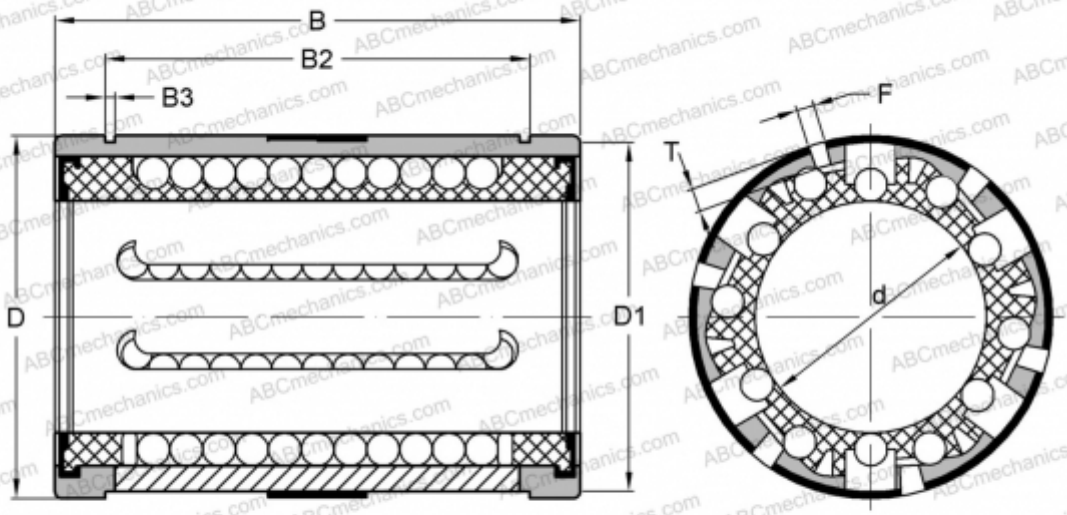


## Technical specification

| DIMENSIONS, MM | |
|---|---|
| d | 50,000 |
| D | 75,000 |
| B | 100,000 |
| D1 | 71,400 |
| B2 | 77,300 |
| B3 | 2,650 |
| T | 2,300 |
| F | 5 |
| **WEIGHT, KG** | 0,670 |
| **MANUFACTURER** | INA |