KS12-PP INA

Linear bushing

TYPE: Shaft guidance systems, Linear bushing, Self aligning, Close type, Type KS..PP, heavy duty range, sealed on both sides (INA)

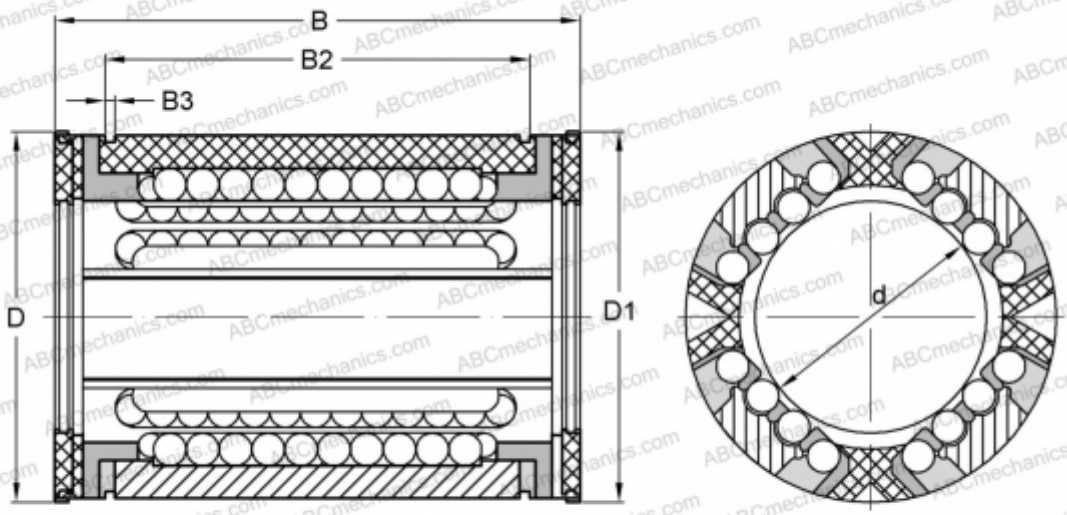

Technical specification

DIMENSIONS, MM	
d	12,000
D	22,000
B	32,000
D1	21,000
B2	22,600
B3	1,300
WEIGHT, KG	0,018
MANUFACTURER	INA