# KX12-PP INA

Linear bushing

TYPE: Shaft guidance systems, Linear bushing, Self aligning, Close type, Type KX..PP, heavy duty range, sealed on both sides, inch size (INA)

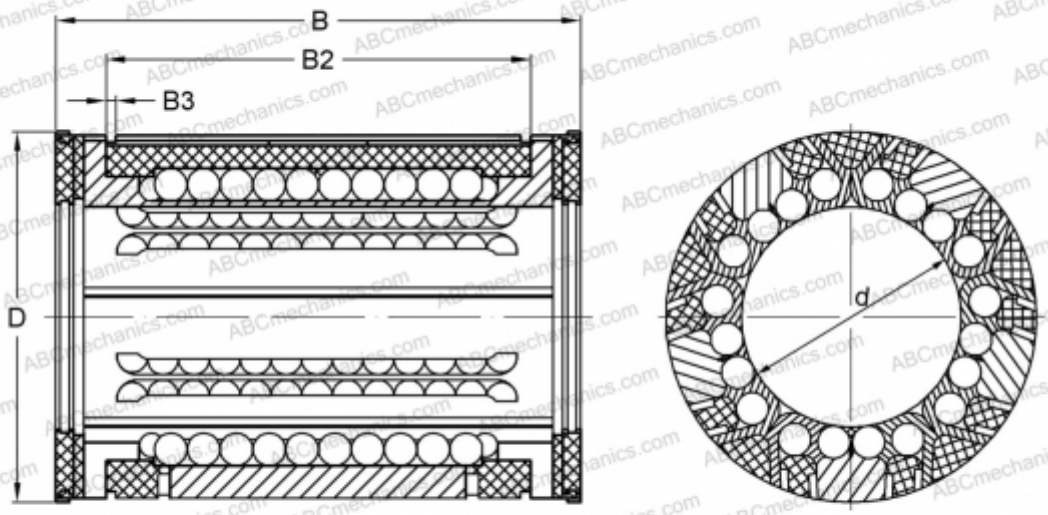


## Technical specification

| | |
|---|---|
| **DIMENSIONS, MM** | |
| d | 19,050 |
| D | 31,750 |
| B | 41,275 |
| B2 | 32,309 |
| B3 | 1,422 |
| **WEIGHT, KG** | 0,053 |
| **MANUFACTURER** | INA |