KBZ20-PP INA

Linear bushing

TYPE: Shaft guidance systems, Linear bushing, Standard, Close type, Type KBZ..PP, machined range, sealed on both sides, inch size (INA)

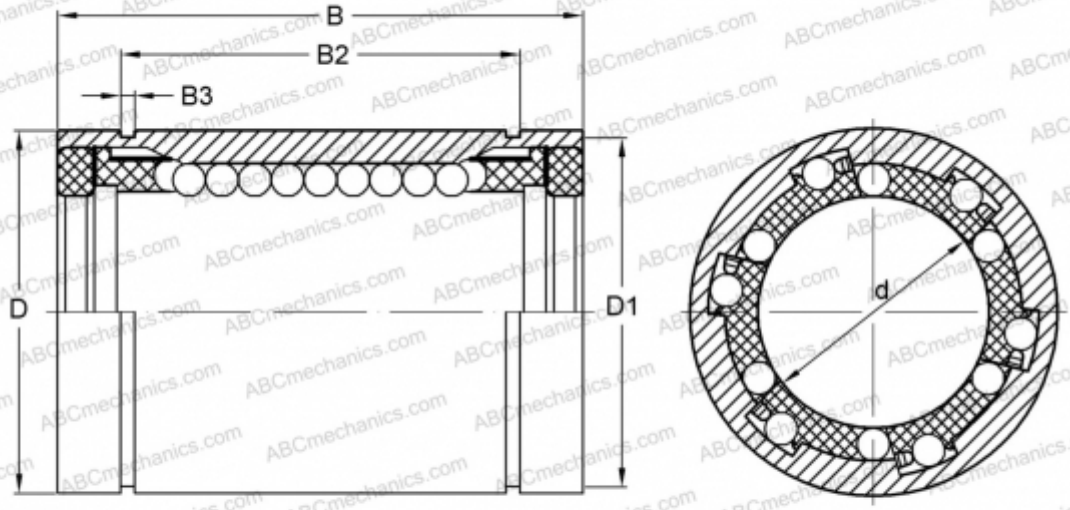

Technical specification

DIMENSIONS, MM	
d	31,750
D	50,800
B	66,675
D1	47,904
B2	50,927
B3	1,727
WEIGHT, KG	0,440
MANUFACTURER	INA