CR 9855 CR

Radial shaft seals

TYPE: Radial shaft seals, Metal case, With spring-loaded sealing slip, Type CRW5, material NBR (SKF)

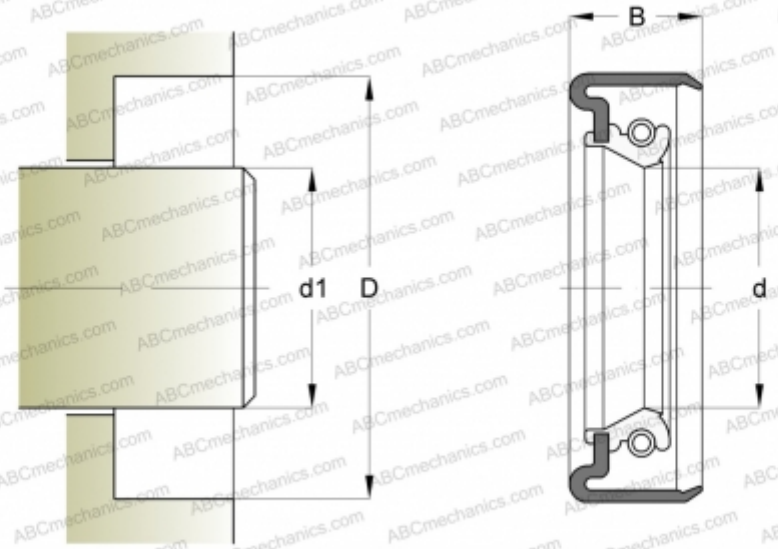

Technical specification

DIMENSIONS, MM	
d1	25,400
d	25,400
D	38,075
B	6,350

MANUFACTURER	CR

INTERCHANGE	
SKF	9855

CALCULATION DATA	
Operating temperature min	-40 °C
Operating temperature max	100 °C
Permissible operating temperature, short periods max	120 °C
Pressure differential max	0,630 Mpa
Maximum shaft surface speed	10,000 m/s