CR 26289 CR

Radial shaft seals

TYPE: Radial shaft seals, Metal case, With spring-loaded sealing slip, Type TL4, material NBR (SKF)

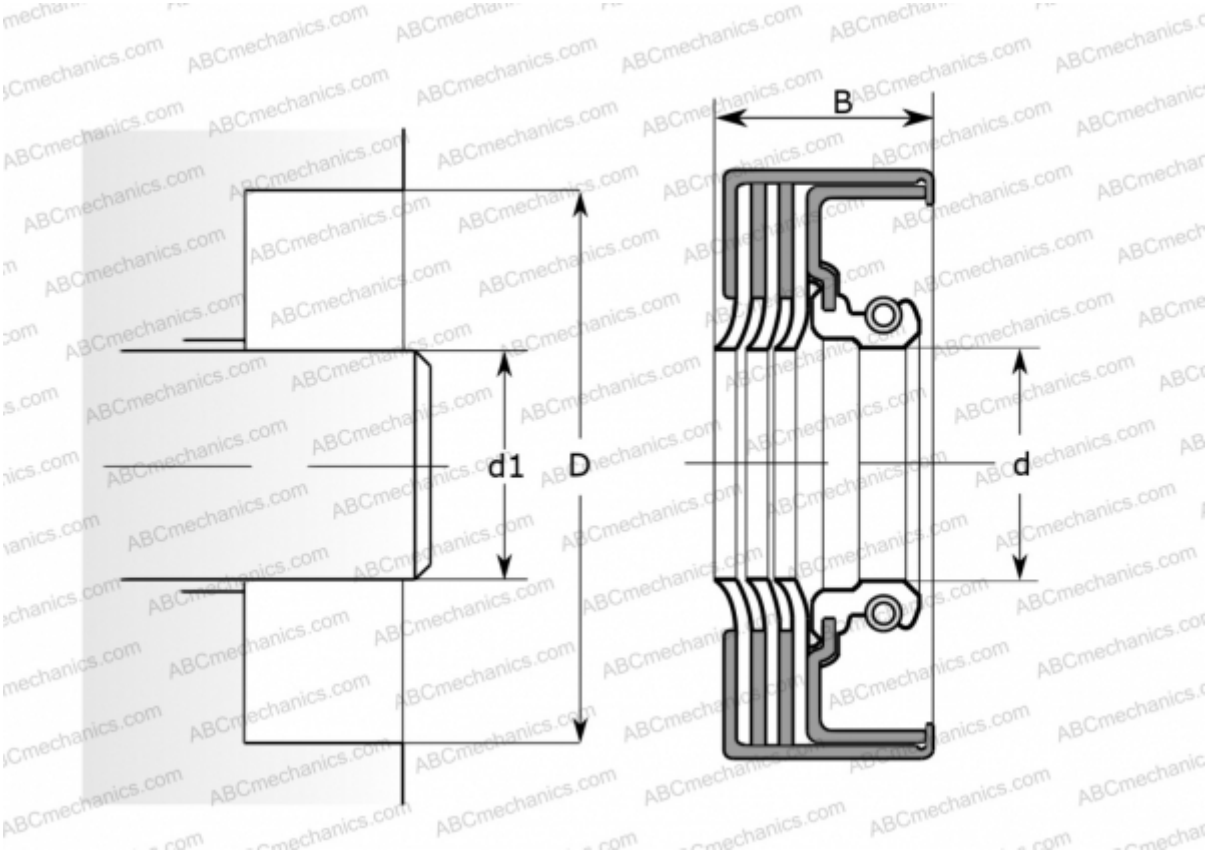

Technical specification

DIMENSIONS, MM	
d1	66,675
d	66,675
D	95,275
B	18,161

MANUFACTURER	CR

INTERCHANGE	
SKF	26289

CALCULATION DATA	
Maximum shaft surface speed	0,001 m/s