3141 SKF

Radial shaft seals

TYPE: Radial shaft seals, Metal case, Springless sealing lip, Type HM3, material NBR (SKF)

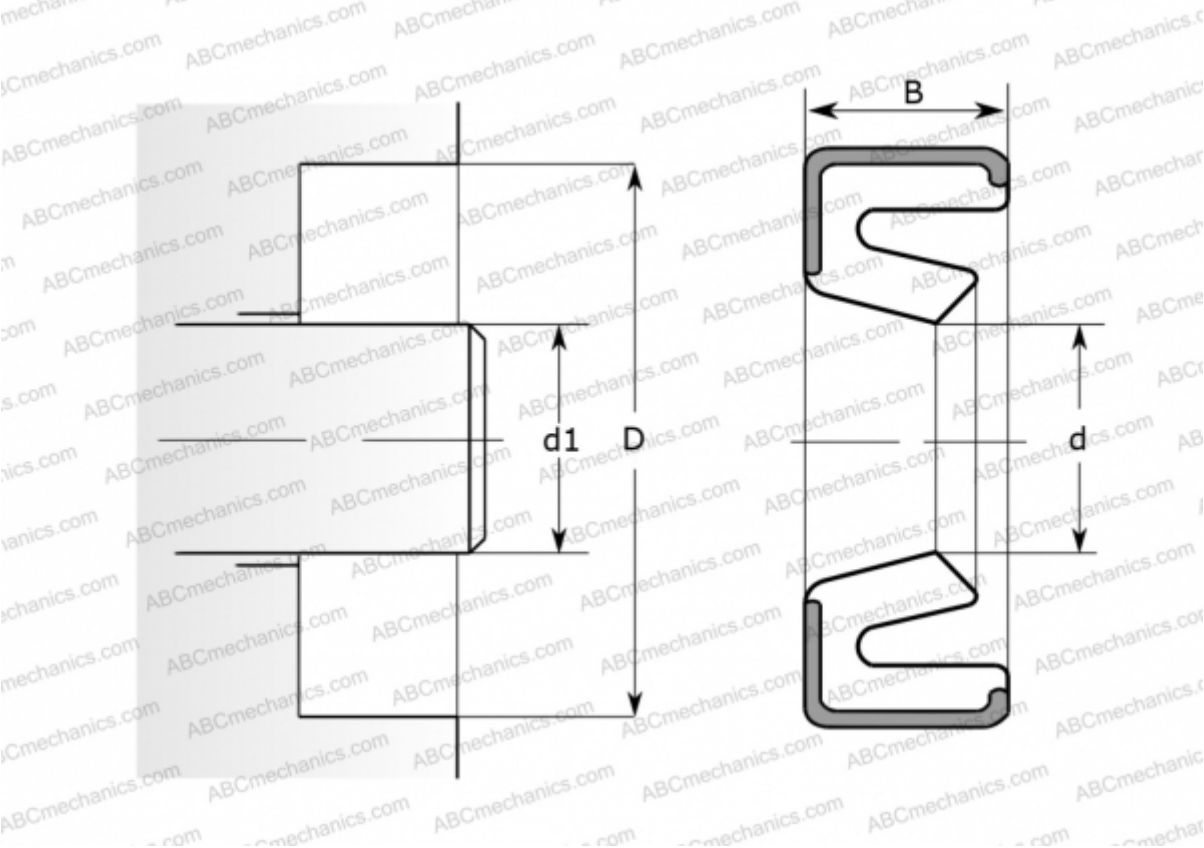

Technical specification

DIMENSIONS, MM	
d1	7,950
d	7,950
D	19,050
B	6,350

MANUFACTURER	SKF

INTERCHANGE	
CR	CR 3141

CALCULATION DATA	
Operating temperature min	-40 °C
Operating temperature max	100 °C
Permissible operating temperature, short periods max	120 °C
Pressure differential max	0,020 Mpa
Maximum shaft surface speed	6,000 m/s