538545 SKF

Radial shaft seals

TYPE: Radial shaft seals, Metal case, Springless sealing lip, Type HM3, material FPM/FKM (SKF)

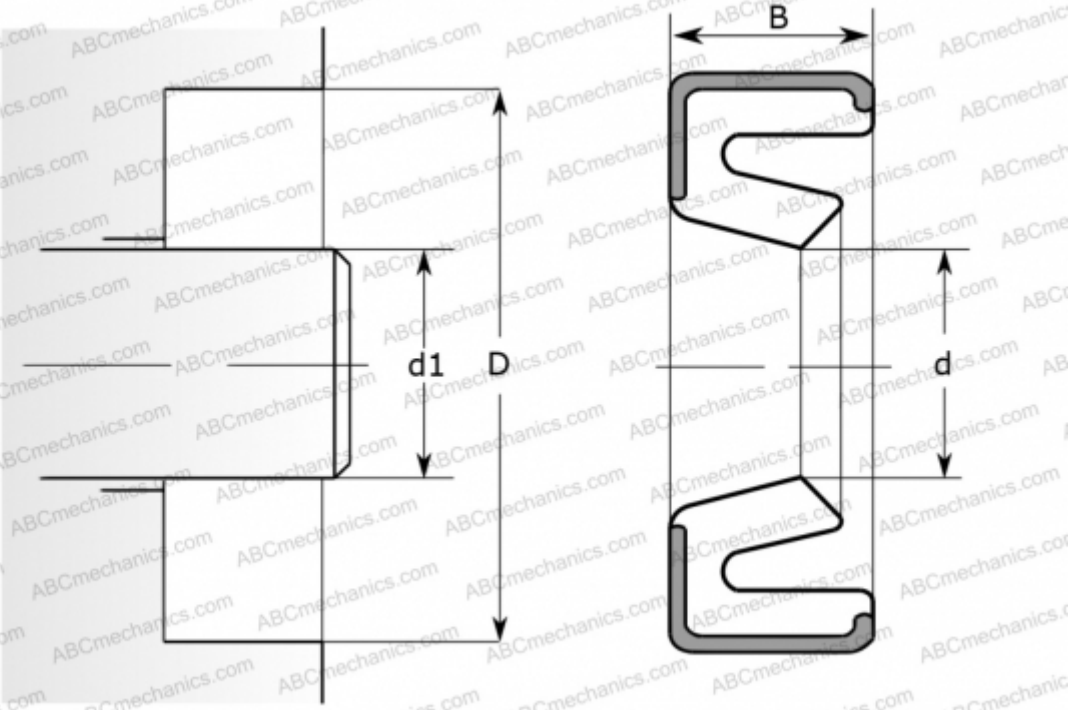

Technical specification

DIMENSIONS, MM	
d1	12,700
d	12,700
D	17,450
B	2,362

MANUFACTURER	SKF

INTERCHANGE	
CR	CR 538545

CALCULATION DATA	
Operating temperature min	-40 °C
Operating temperature max	200 °C
Pressure differential max	0,070 Mpa
Maximum shaft surface speed	6,000 m/s