CR 12611 CR

Radial shaft seals

TYPE: Radial shaft seals, Metal case, Springless sealing lip, Type HM18, material NBR (SKF)

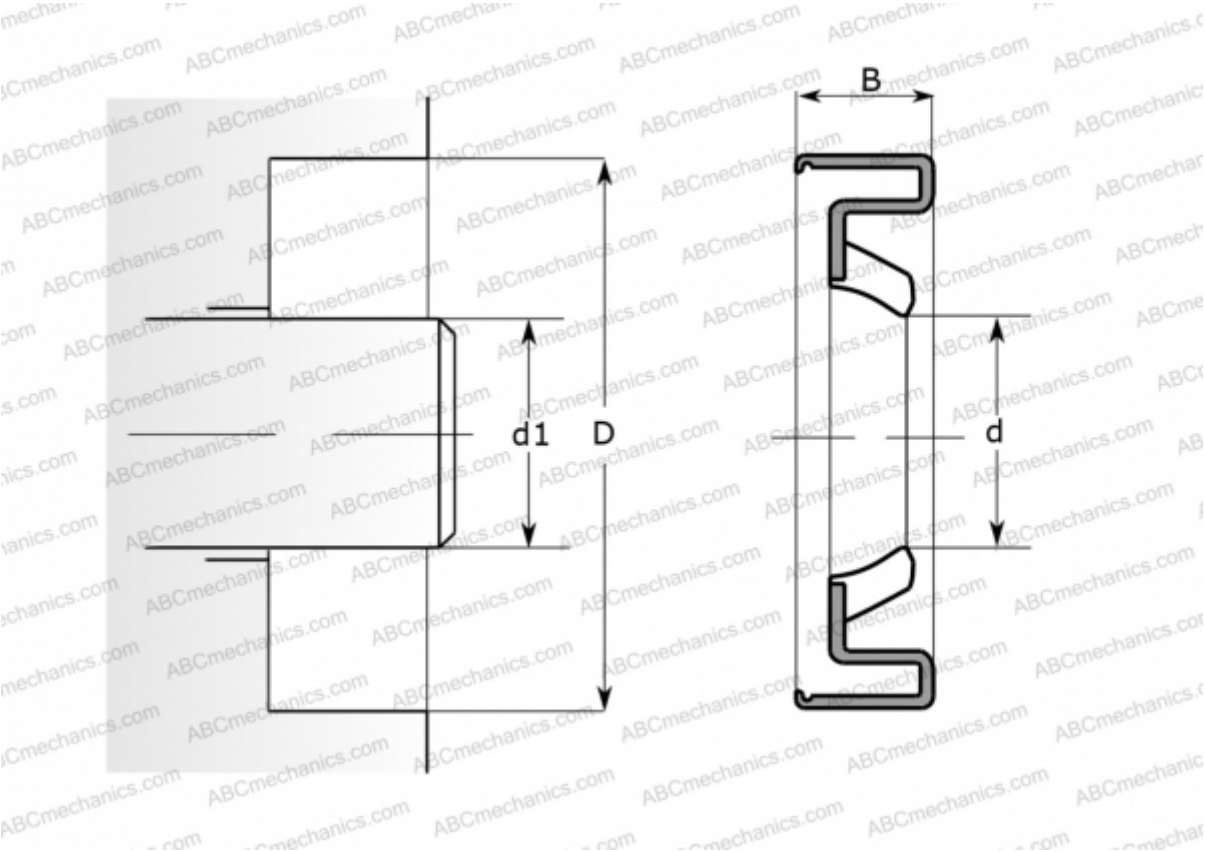

Technical specification

DIMENSIONS, MM	
d1	31,750
d	31,750
D	59,131
B	12,700

MANUFACTURER	CR

INTERCHANGE	
SKF	12611

CALCULATION DATA	
Operating temperature min	-40 °C
Operating temperature max	100 °C
Permissible operating temperature, short periods max	120 °C
Pressure differential max	0,070 Mpa
Maximum shaft surface speed	6,000 m/s