CR 564365 CR

Radial shaft seals

TYPE: Radial shaft seals, Metal case, Springless sealing lip, Type HM21, material FPM/FKM (SKF)

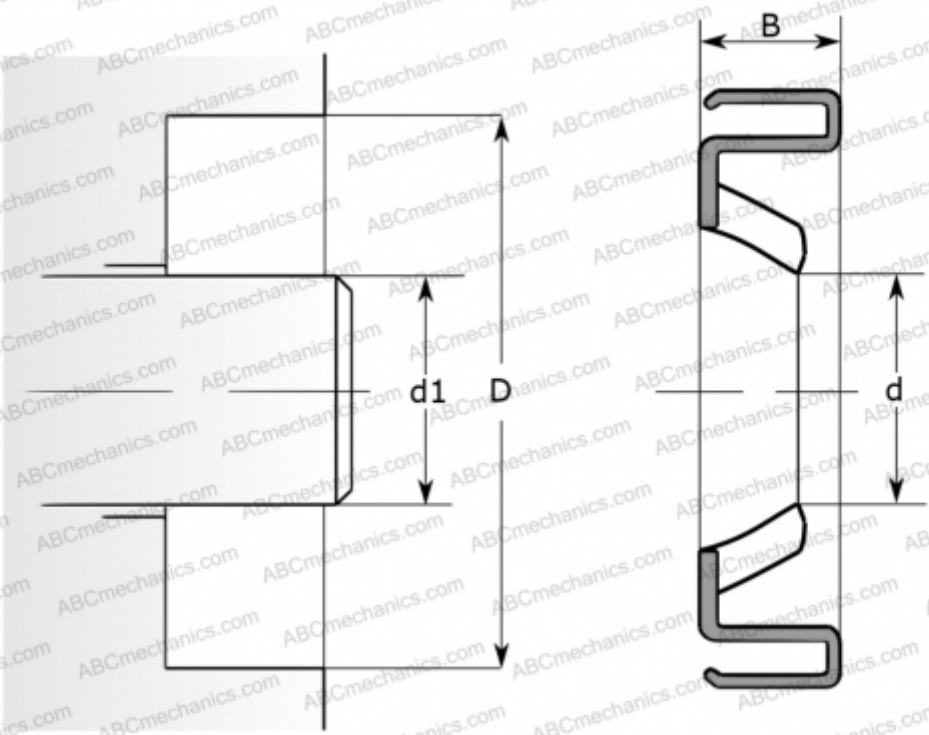

Technical specification

DIMENSIONS, MM	
d1	36,525
d	36,525
D	61,900
B	6,350

MANUFACTURER	CR

INTERCHANGE	
SKF	564365

CALCULATION DATA	
Operating temperature min	-40 °C
Operating temperature max	200 °C
Permissible operating temperature, short periods max	220 °C
Pressure differential max	0,070 Mpa
Maximum shaft surface speed	6,000 m/s