CR 539075 CR

Radial shaft seals

TYPE: Radial shaft seals, Metal case, Springless sealing lip, Type HM21, material FPM/FKM (SKF)

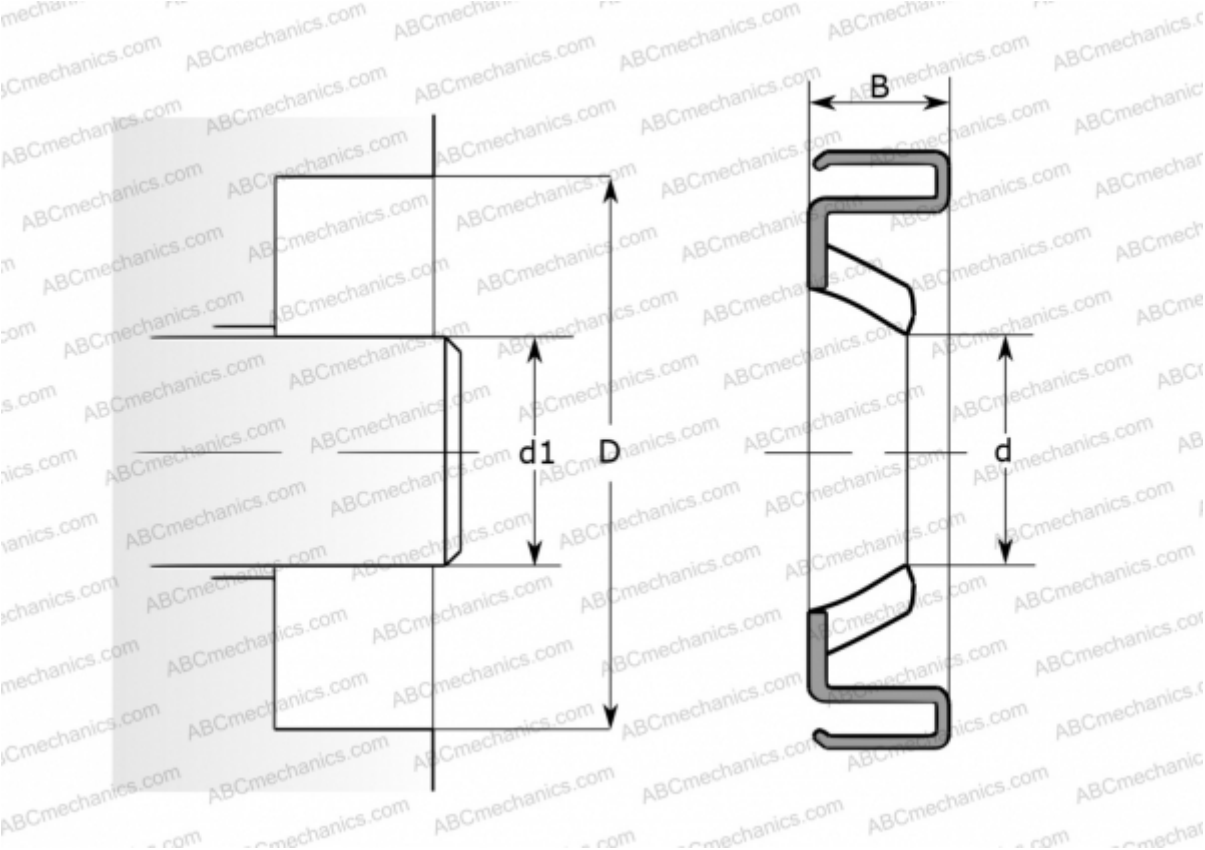

Technical specification

DIMENSIONS, MM	
d1	76,200
d	76,200
D	101,600
B	6,350

MANUFACTURER	CR

INTERCHANGE	
SKF	539075

CALCULATION DATA	
Operating temperature min	-40 °C
Operating temperature max	200 °C
Permissible operating temperature, short periods max	220 °C
Pressure differential max	0,070 Mpa
Maximum shaft surface speed	6,000 m/s