22x28x4 HM10 R SKF

Radial shaft seals

TYPE: Radial shaft seals, Metal case, Springless sealing lip, Type HMA10, material NBR (SKF)

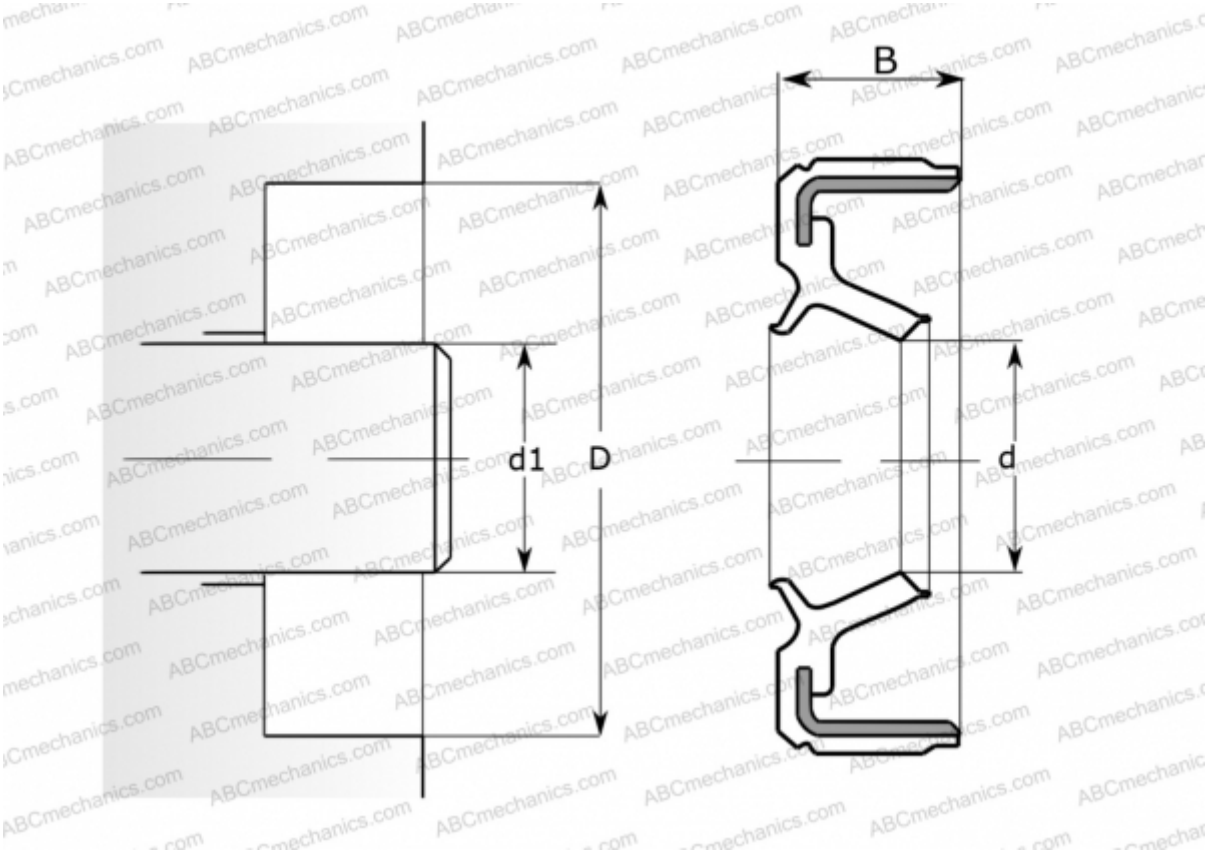

Technical specification

DIMENSIONS, MM	
d1	22,000
d	22,000
D	28,000
B	4,000

MANUFACTURER	SKF

INTERCHANGE	
CR	CR 22x28x4 HM10 R

CALCULATION DATA	
Operating temperature min	-40 °C
Operating temperature max	100 °C
Permissible operating temperature, short periods max	120 °C
Pressure differential max	0,070 Mpa
Maximum shaft surface speed	0,001 m/s