CR 20672 CR

Radial shaft seals

TYPE: Radial shaft seals, Metal case and a secondary reinforcement in the side face, Springless sealing lip, Type TL6, material X-NBR (SKF)

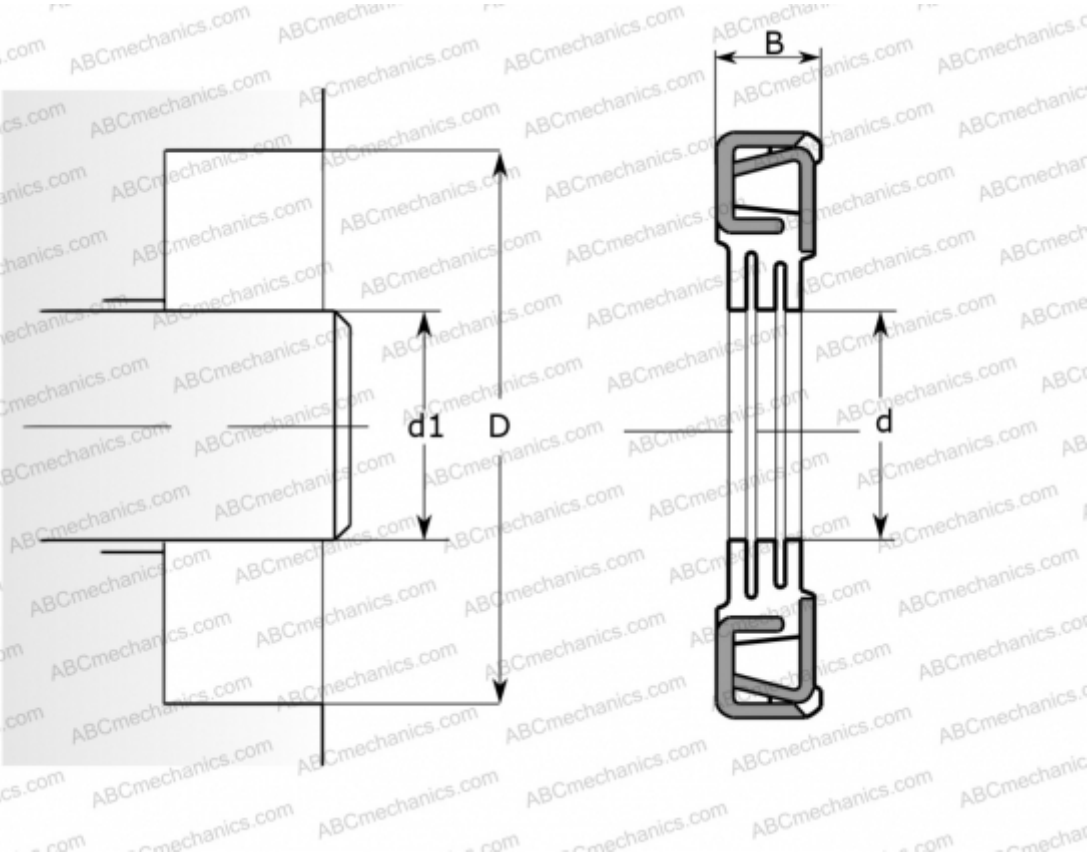

Technical specification

DIMENSIONS, MM	
d1	52,400
d	52,400
D	79,985
B	12,700

MANUFACTURER	CR

INTERCHANGE	
SKF	20672

CALCULATION DATA	
Maximum shaft surface speed	0,001 m/s