6x22x7 HMSA10 V SKF

Radial shaft seals

TYPE: Radial shaft seals, With a rubber outside diameter, With spring-loaded sealing slip, Type HMSA10, material FPM/FKM (SKF)

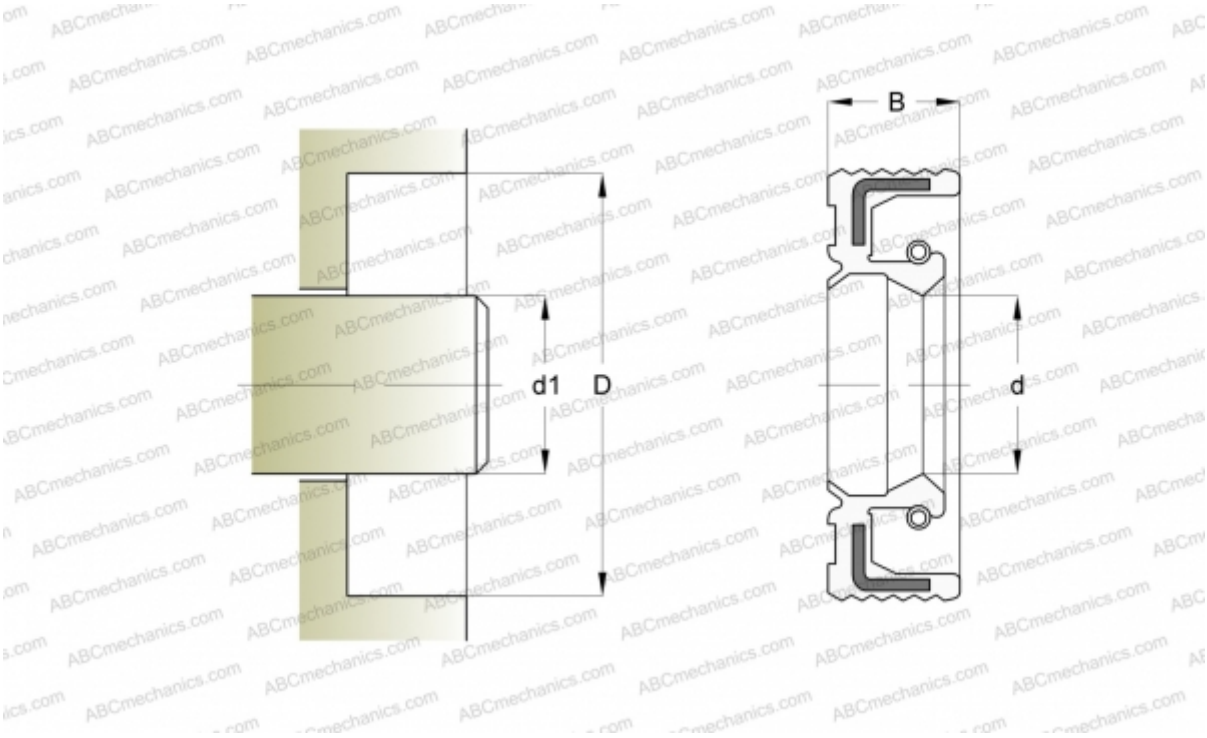

Technical specification

DIMENSIONS, MM	
d1	6,000
d	6,000
D	22,000
B	7,000

MANUFACTURER	SKF

CALCULATION DATA	
Operating temperature min	-20 °C
Operating temperature max	200 °C
Permissible operating temperature, short periods max	200 °C
Pressure differential max	0,030 Mpa
Maximum shaft surface speed	0,001 m/s