97527 SKF

Radial shaft seals

TYPE: Seals for heavy industrial applications, Metal case, With spring-loaded sealing slip, Type HDS3, material X-NBR (SKF)

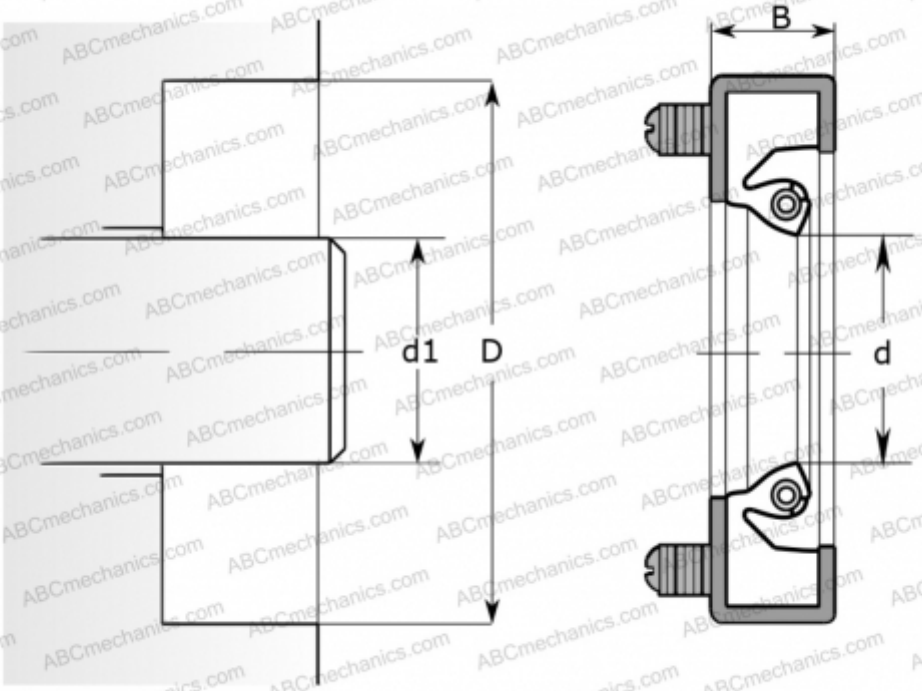

Technical specification

DIMENSIONS, MM	
d1	247,650
d	247,650
D	279,400
B	15,880

MANUFACTURER	SKF

CALCULATION DATA	
Operating temperature min	-55 °C
Operating temperature max	105 °C
Permissible operating temperature, short periods max	125 °C
Pressure differential max	0,100 Mpa
Maximum shaft surface speed	25,000 m/s