529490 SKF

Axial shaft seals

TYPE: Axial shaft seals, Axial clamp seals, Type CT1, material NBR (SKF)

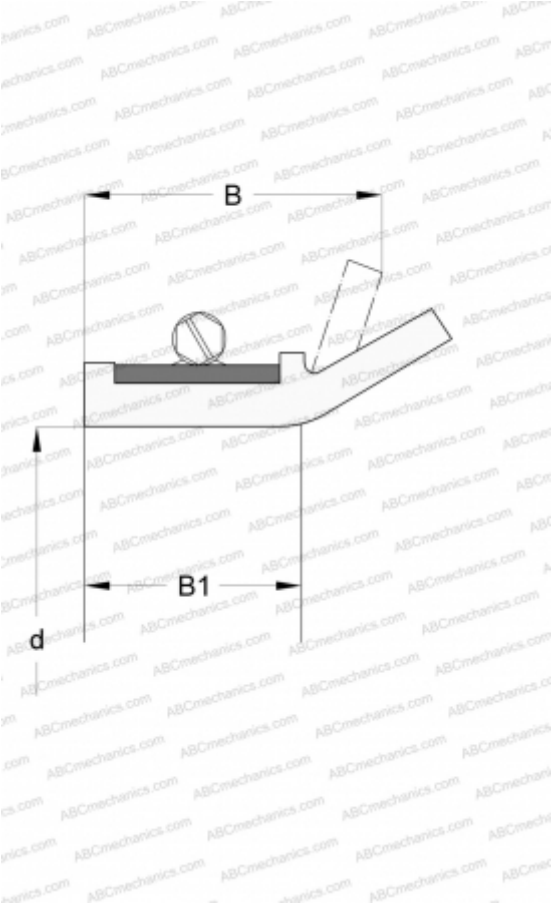

Technical specification

DIMENSIONS, MM	
d1	219,000
d	219,000
B	28,600
B1	17,500

MANUFACTURER	SKF

CALCULATION DATA	
Operating temperature min	-50 °C
Operating temperature max	100 °C
Permissible operating temperature, short periods max	120 °C
Pressure differential max	0,200 Mpa
Maximum shaft surface speed	1,750 m/s