334908 SIMRIT

Radial shaft seals

TYPE: Radial shaft seals, Metal case and a secondary reinforcement in the side face, With spring-loaded sealing slip, Type B2FUD, material 72 NBR 902 (SIMRIT)

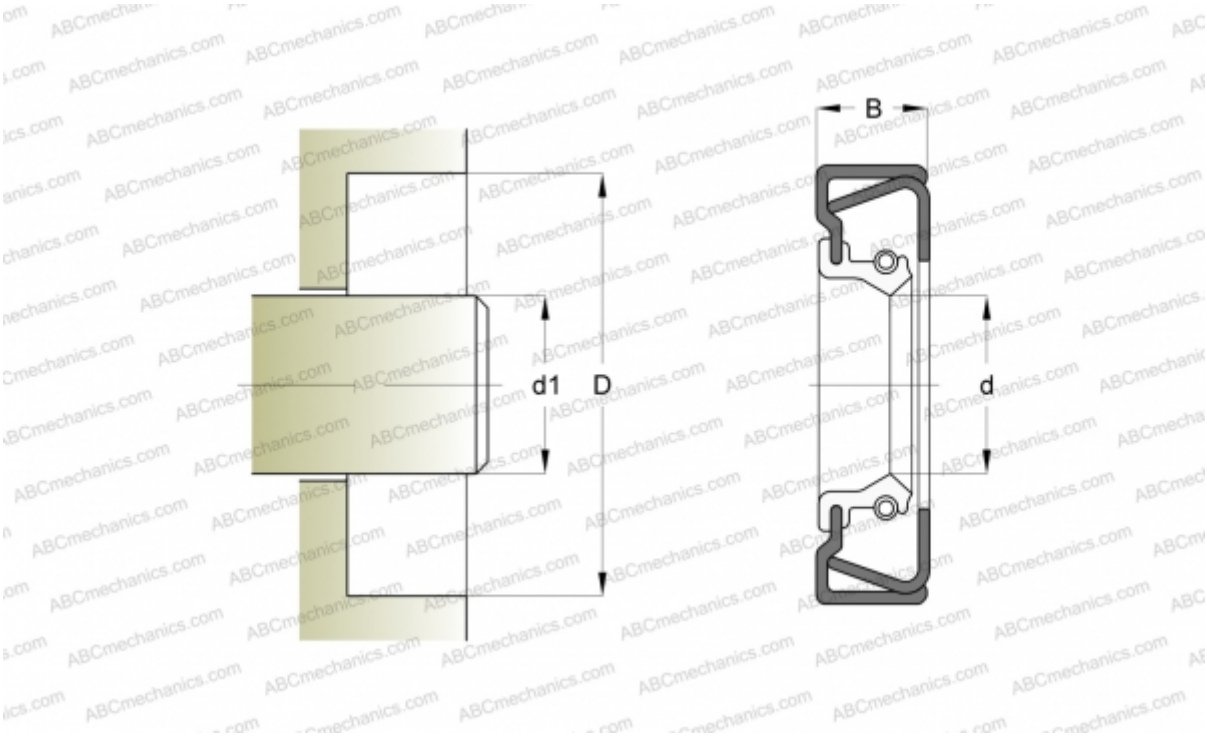

Technical specification

DIMENSIONS, MM	
d1	17,000
d	17,000
D	35,000
B	10,000

MANUFACTURER	SIMRIT

CALCULATION DATA	
Operating temperature min	-40 °C
Operating temperature max	100 °C
Permissible operating temperature, short periods max	120 °C
Pressure differential max	0,020 Mpa
Maximum shaft surface speed	10,000 m/s

REPLACES
B2FUD 17-35-10 72 NBR 902 (334908)