451667 SIMRIT

Radial shaft seals

TYPE: Radial shaft seals, With a rubber outside diameter, With spring-loaded sealing slip, Type BAUSLX27, material 72 NBR 902 (SIMRIT)

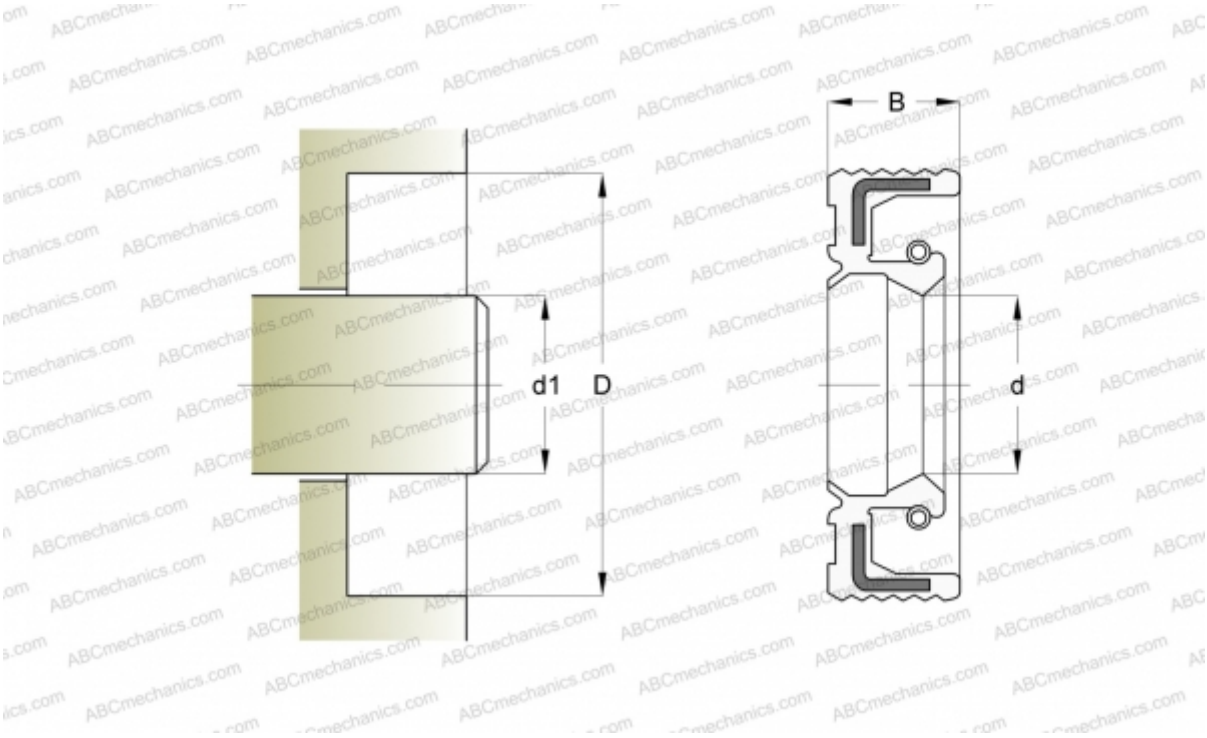

Technical specification

DIMENSIONS, MM	
d1	18,000
d	18,000
D	35,000
B	7,000

MANUFACTURER	SIMRIT

CALCULATION DATA	
Operating temperature min	-40 °C
Operating temperature max	100 °C
Permissible operating temperature, short periods max	120 °C
Pressure differential max	0,050 Mpa
Maximum shaft surface speed	10,000 m/s

REPLACES
BAUSLX27 18-35-7 72 NBR 902 (451667)