2927 SIMRIT

Radial shaft seals

TYPE: Radial shaft seals, With a rubber outside diameter, With spring-loaded sealing slip, Type BABSL, material 72 NBR 902 (SIMRIT)

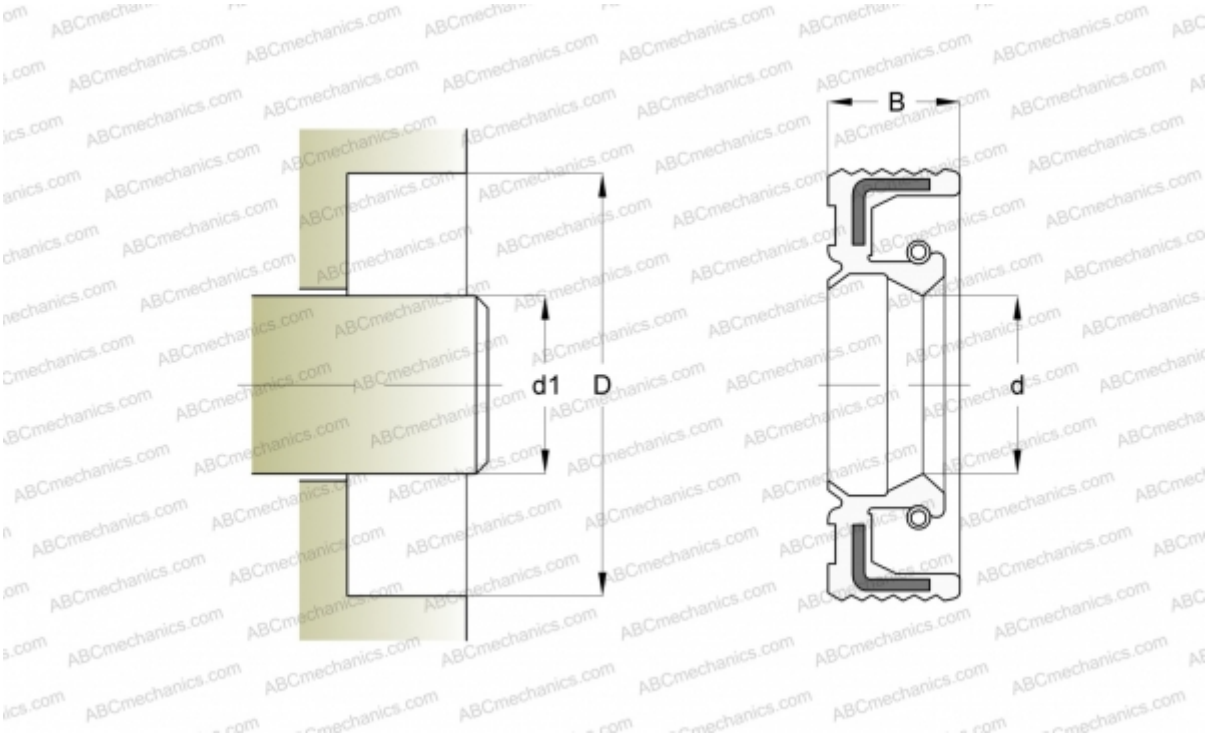

Technical specification

DIMENSIONS, MM	
d1	12,000
d	12,000
D	24,000
B	6,000

MANUFACTURER	SIMRIT

CALCULATION DATA	
Operating temperature min	-40 °C
Operating temperature max	100 °C
Maximum shaft surface speed	10,000 m/s

REPLACES
BABSL 12-24-6 72 NBR 902 (2927)