12011107 SIMRIT

Radial shaft seals

TYPE: Radial shaft seals, With a rubber outside diameter, With spring-loaded sealing slip, Type BAFUDSL, material 72 NBR 902 (SIMRIT)

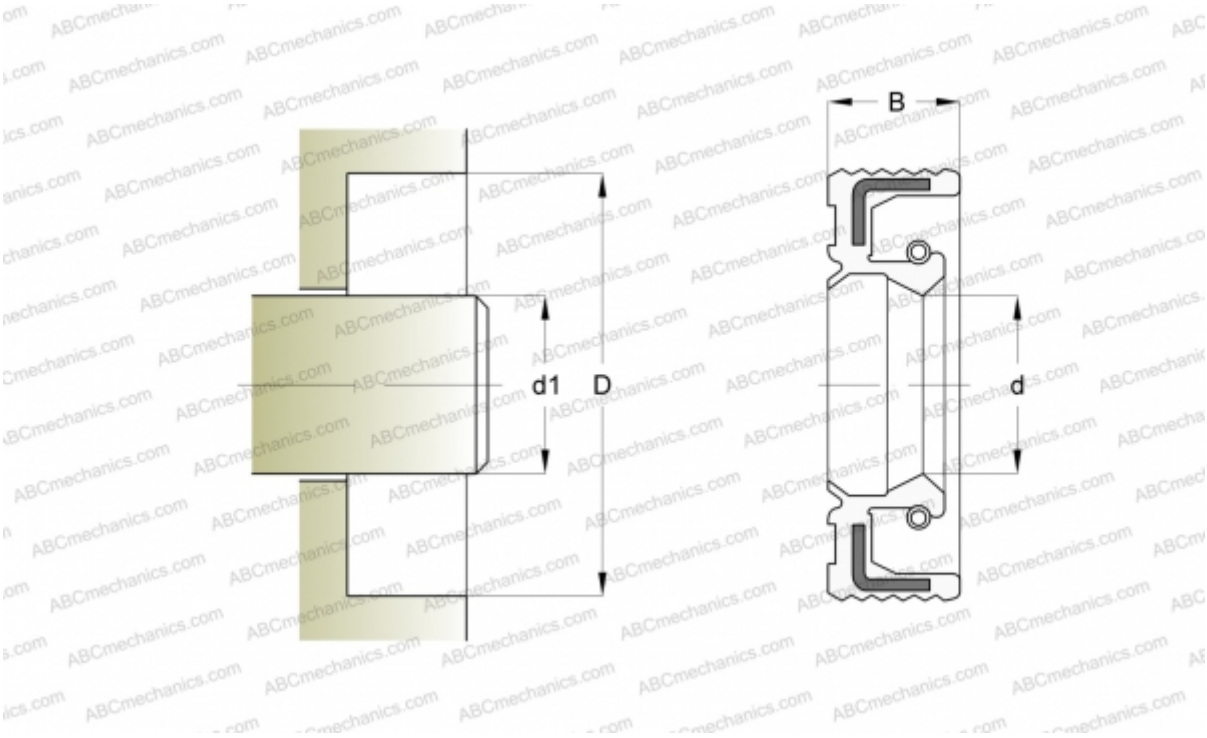

Technical specification

DIMENSIONS, MM	
d1	15,000
d	15,000
D	24,000
B	6,000

MANUFACTURER	SIMRIT

CALCULATION DATA	
Operating temperature min	-40 °C
Operating temperature max	100 °C
Permissible operating temperature, short periods max	120 °C
Pressure differential max	0,020 Mpa
Maximum shaft surface speed	10,000 m/s

REPLACES
BAFUDSL 15-24-6 72 NBR 902 (12011107)