49011963 SIMRIT

Radial shaft seals

TYPE: Radial shaft seals, With a rubber outside diameter, With spring-loaded sealing slip, Type BAUMSL, material 75 FKM 585 (SIMRIT)

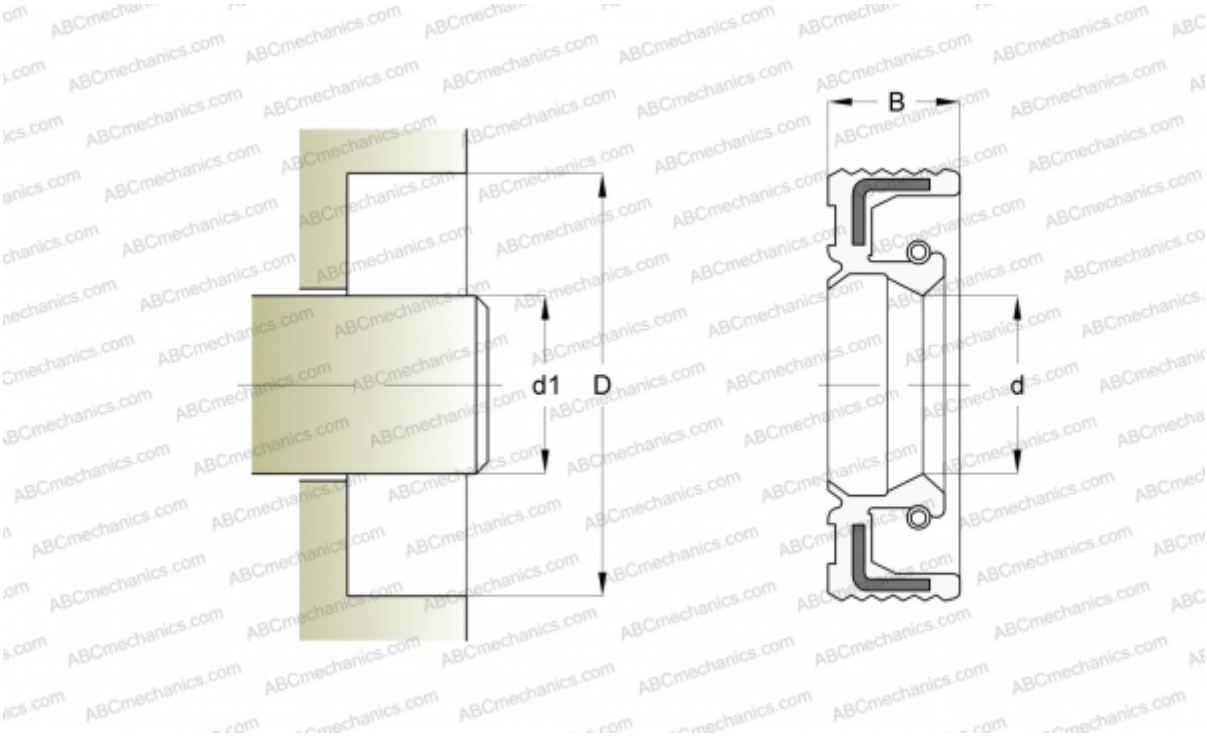

Technical specification

DIMENSIONS, MM	
d1	32,000
d	32,000
D	62,000
B	10,000

MANUFACTURER	SIMRIT

CALCULATION DATA	
Operating temperature min	-25 °C
Operating temperature max	160 °C
Pressure differential max	0,050 Mpa
Maximum shaft surface speed	30,000 m/s

REPLACES
BAUMSL 32-62-10 75 FKM 585 (49011963)