CUCT 202CE ASAHI

Ball bearing units

TYPE: Housing units, Take-up housing units, Cast iron housing, Radial insert ball bearing with grub screws in inner ring, Type CUCT..CE with cast iron covers, closed cover (ASAHI)

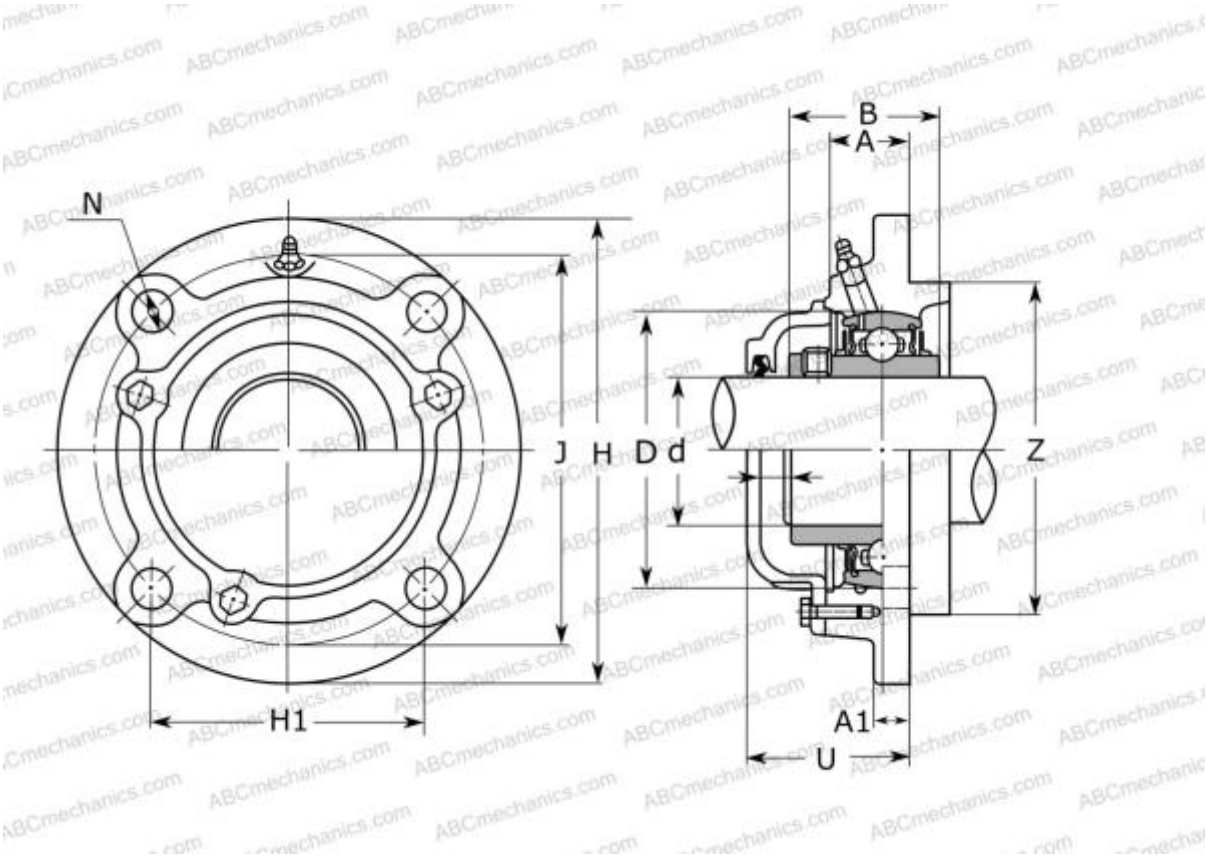

Technical specification

DIMENSIONS, MM	
d	15,000
D	47,000
B	31,000
L	96,000
H	89,000
A	21,000
H2	32,000
A1	12,000
A2	62,000
N	19,000
N1	16,000
S	12,700
U	51,000
I	51,000
h	61,000

WEIGHT, KG	1,200
Bearing	UC 202
Housing	CT 204
MANUFACTURER	ASAHI

INTERCHANGE	
ASAHI	CT 204 + UC 202