UCC 207 ASAHI

Ball bearing units

TYPE: Housing units, Cartridge units, Cast iron housing, Radial insert ball bearing with grub screws in inner ring, Type UCC (ASAHI)

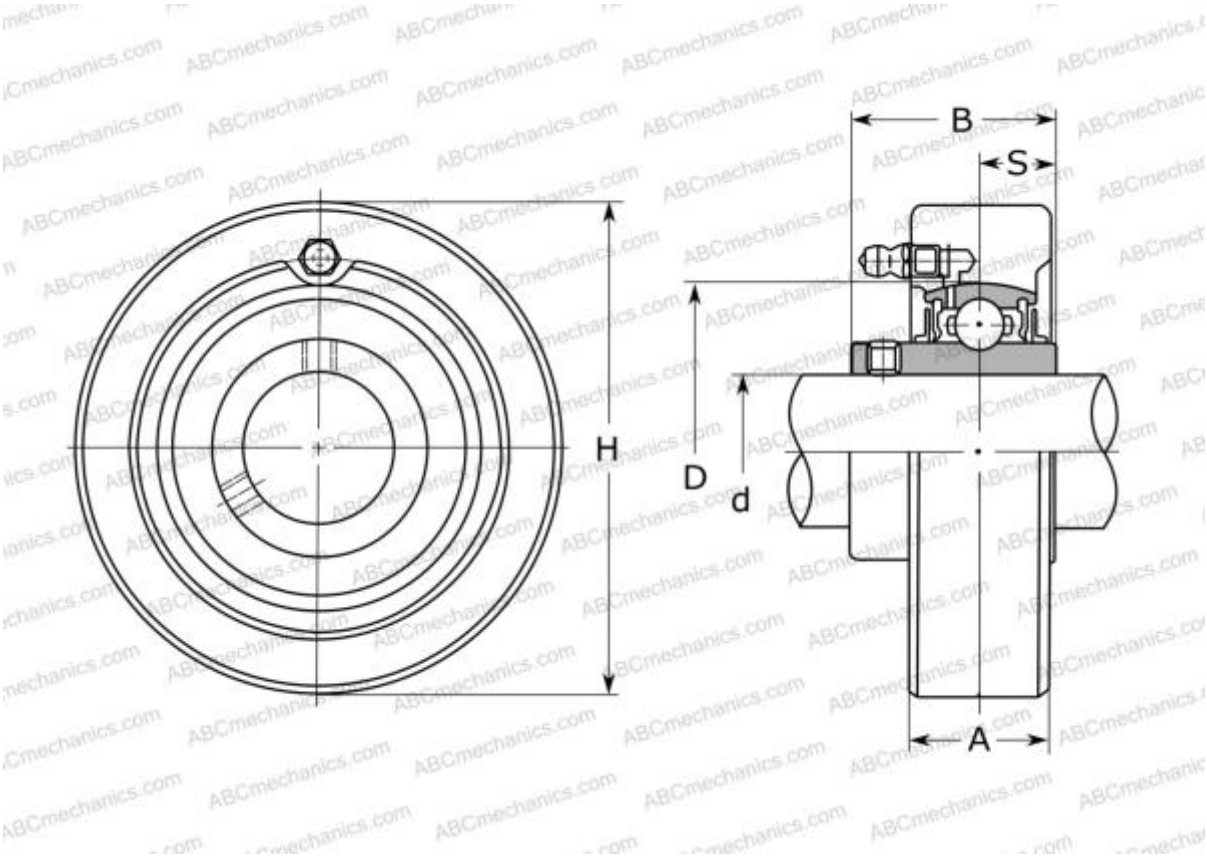

Technical specification

DIMENSIONS, MM	
d	35,000
D	72,000
B	42,900
H	90,000
A	28,000
S	17,500
WEIGHT, KG	0,930
Bearing	UC 207
Housing	C 207
MANUFACTURER	ASAHI

INTERCHANGE	
ASAHI	C 207 + UC 207