UCC X06 ASAHI

Ball bearing units

TYPE: Housing units, Cartridge units, Cast iron housing, Radial insert ball bearing with grub screws in inner ring, Type UCCX (ASAHI)

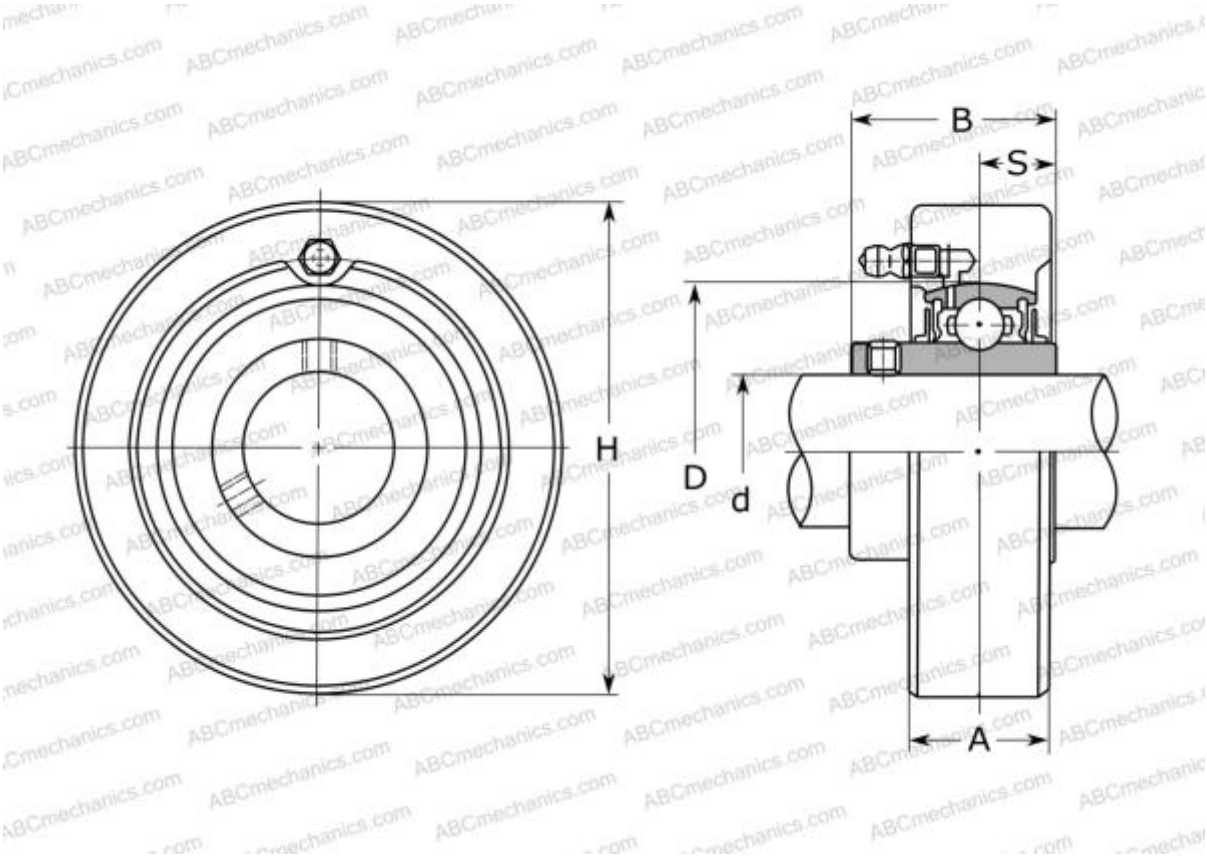

Technical specification

DIMENSIONS, MM	
d	30,000
D	72,000
B	42,900
H	100,000
A	30,000
S	17,500
WEIGHT, KG	1,300
Bearing	UC X06
Housing	C X06
MANUFACTURER	ASAHI

INTERCHANGE	
ASAHI	C X06 + UC X06