UCC X08 ASAHI

Ball bearing units

TYPE: Housing units, Cartridge units, Cast iron housing, Radial insert ball bearing with grub screws in inner ring, Type UCCX (ASAHI)

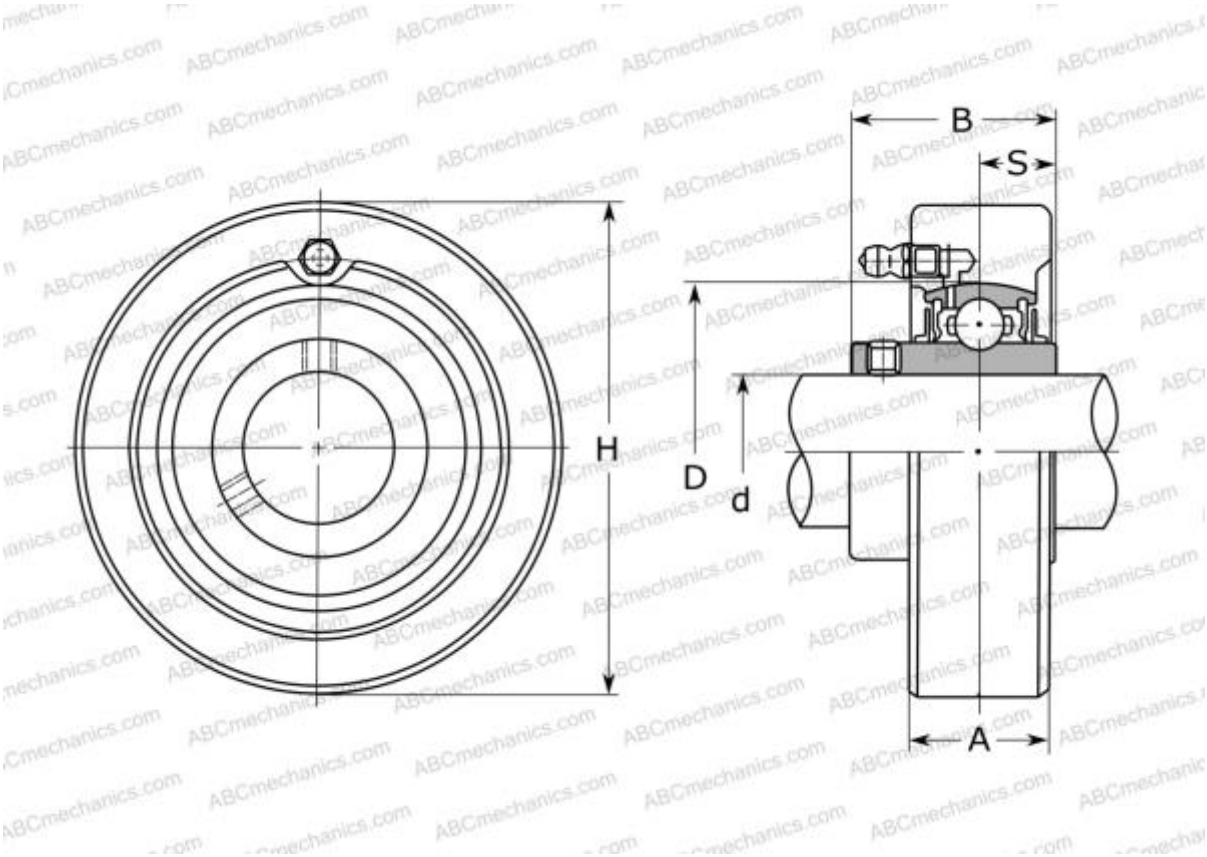

Technical specification

DIMENSIONS, MM	
d	40,000
D	85,000
B	49,200
H	120,000
A	38,000
S	19,000
WEIGHT, KG	2,300
Bearing	UC X08
Housing	C X08
MANUFACTURER	ASAHI

INTERCHANGE	
ASAHI	C X08 + UC X08