# SYK 35 TF SKF

Ball bearing units

TYPE: Housing units, Plummer block, Cast iron housing, Radial insert ball bearing with grub screws in inner ring, Type SYK..TF (SKF), composite

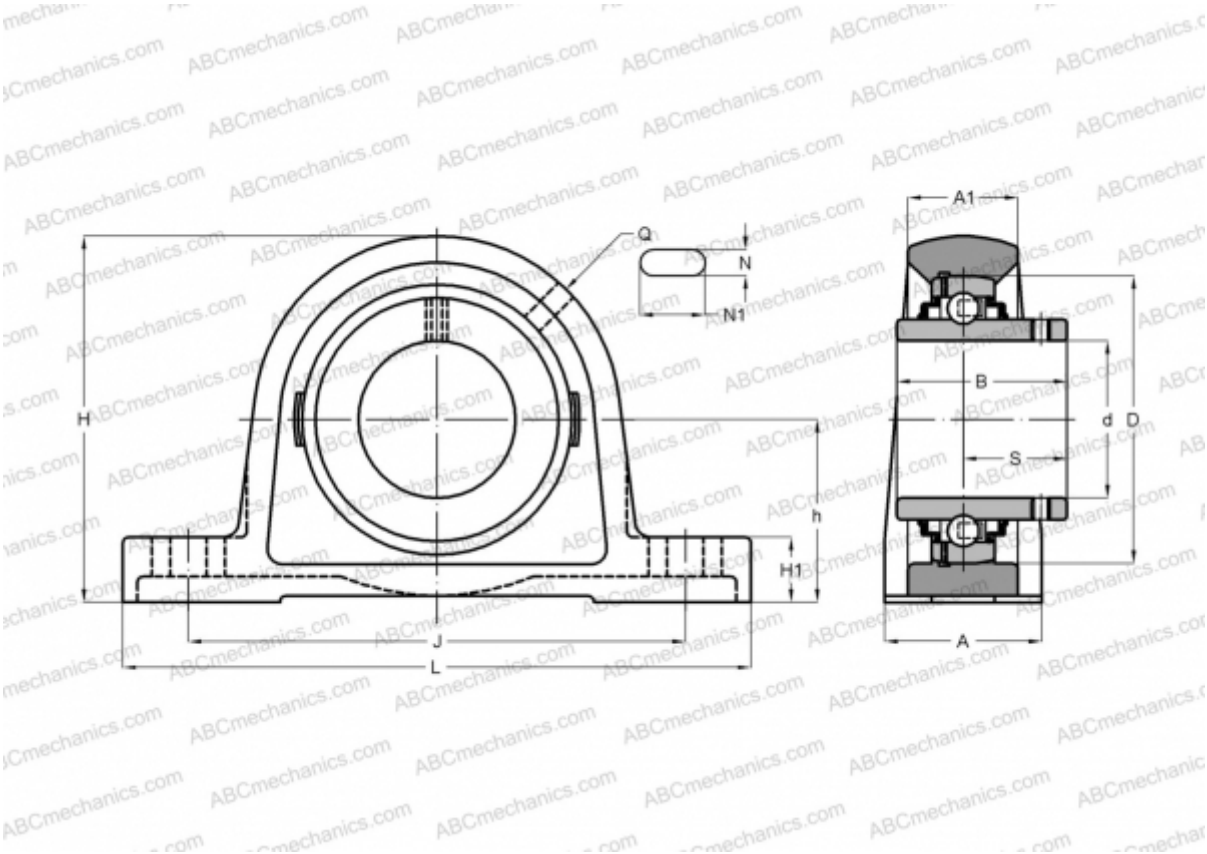


## Technical specification

| DIMENSIONS, MM | |
|---|---|
| d | 35,000 |
| D | 72,000 |
| B | 42,900 |
| L | 164,000 |
| H | 93,000 |
| A | 45,000 |
| J | 126,000 |
| A1 | 27,000 |
| H1 | 19,000 |
| N | 14,500 |
| N1 | 21,500 |
| S | 25,400 |
| h | 47,600 |
| **WEIGHT, KG** | 0,660 |

| | |
|---|---|
| Bearing | YAR 207-2F |
| Housing | SYK 507 |
| Protective cover | ECY 207 |
| **MANUFACTURER** | SKF |
| **CALCULATION DATA** | |
| Basic dynamic load rating, C | 25,500 kN |
| Basic static load rating, Co | 15,300 kN |
| Fatigue load limit, Pu | 0,655 kN |
| Limiting speed | 5300 r/min |