SY 55 TR SKF

Ball bearing units

TYPE: Housing units, Plummer block, Cast iron housing, Radial insert ball bearing with grub screws in inner ring, Type SY..TR (SKF)

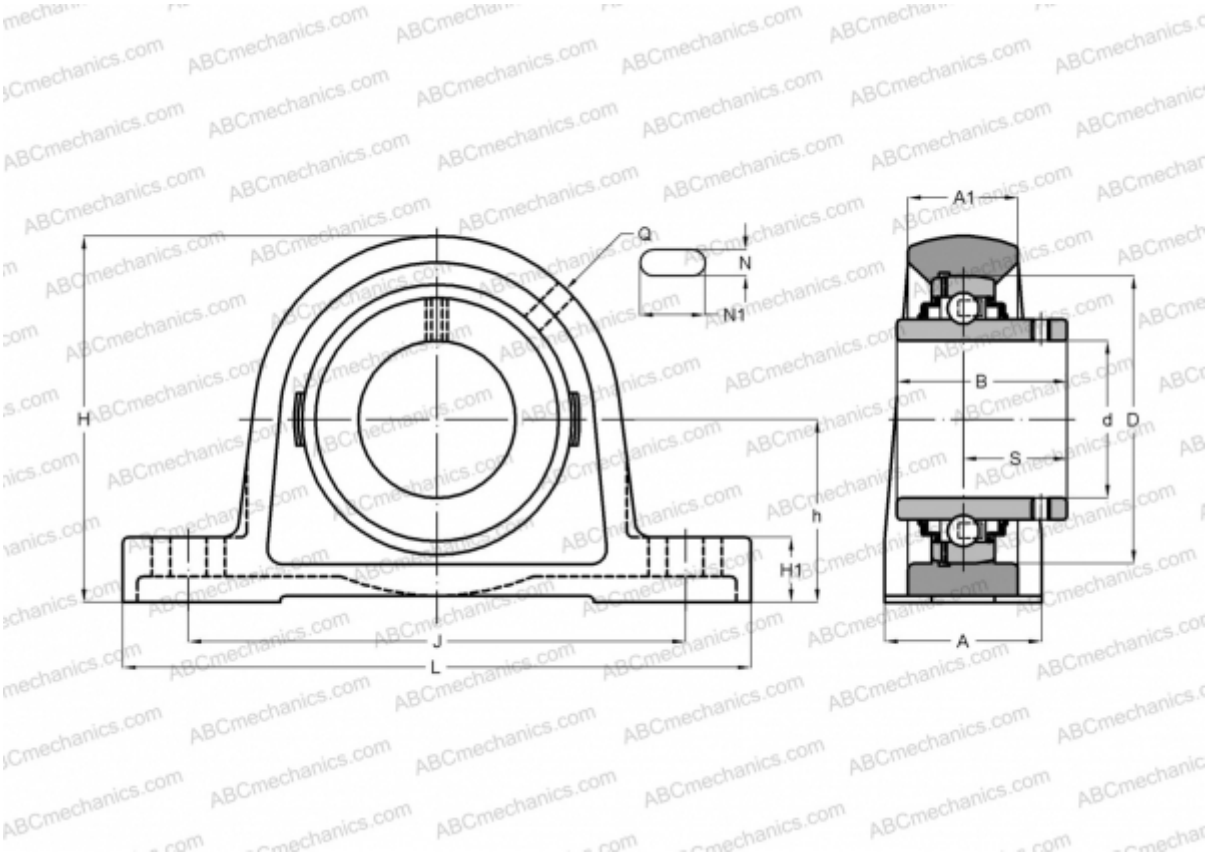

Technical specification

DIMENSIONS, MM	
d	55,000
D	100,000
B	55,600
L	219,000
H	126,000
A	60,000
J	171,500
A1	40,000
H1	24,000
N	18,000
N1	27,500
S	33,400
h	63,500
WEIGHT, KG	3,600

Bearing	YAR 211-2RF
Housing	SY 511 M
Protective cover	ECY 211
MANUFACTURER	SKF
CALCULATION DATA	
Basic dynamic load rating, C	43,600 kN
Basic static load rating, Co	29,000 kN
Fatigue load limit, Pu	1,250 kN
Limiting speed	1900 r/min