SYFJ 30 TF SKF

Ball bearing units

TYPE: Housing units, Plummer block, Narrow cast iron housing, Radial insert ball bearing with grub screws in inner ring, Type SYF/SYFJ..TF (SKF)

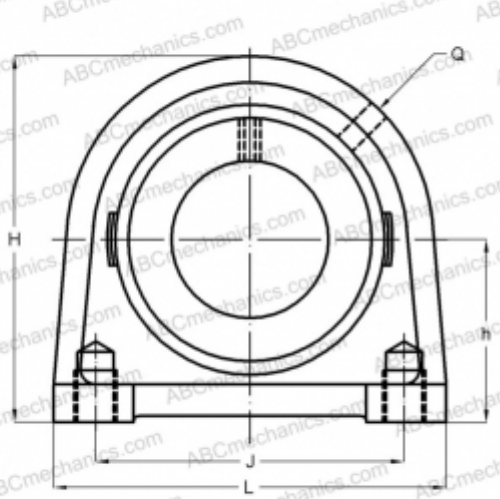

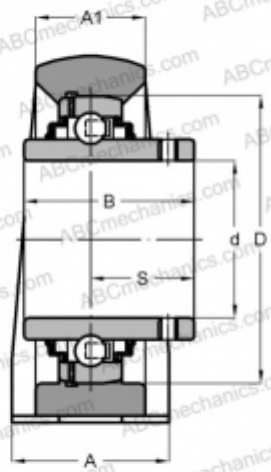

Technical specification

DIMENSIONS, MM	
d	30,000
D	62,000
B	38,100
L	94,000
H	85,000
A	48,000
J	66,000
A1	28,500
S	22,200
h	42,900
WEIGHT, KG	1,000
Bearing	YAR 206-2F
Housing	SYFJ 506

MANUFACTURER	SKF

CALCULATION DATA	
Basic dynamic load rating, C	19,500 kN
Basic static load rating, Co	11,200 kN
Fatigue load limit, Pu	0,475 kN
Limiting speed	6300 r/min