P 25 TF SKF

Ball bearing units

TYPE: Housing units, Plummer block, Sheet steel housing, Radial insert ball bearing with grub screws in inner ring, Type P..TF (SKF)

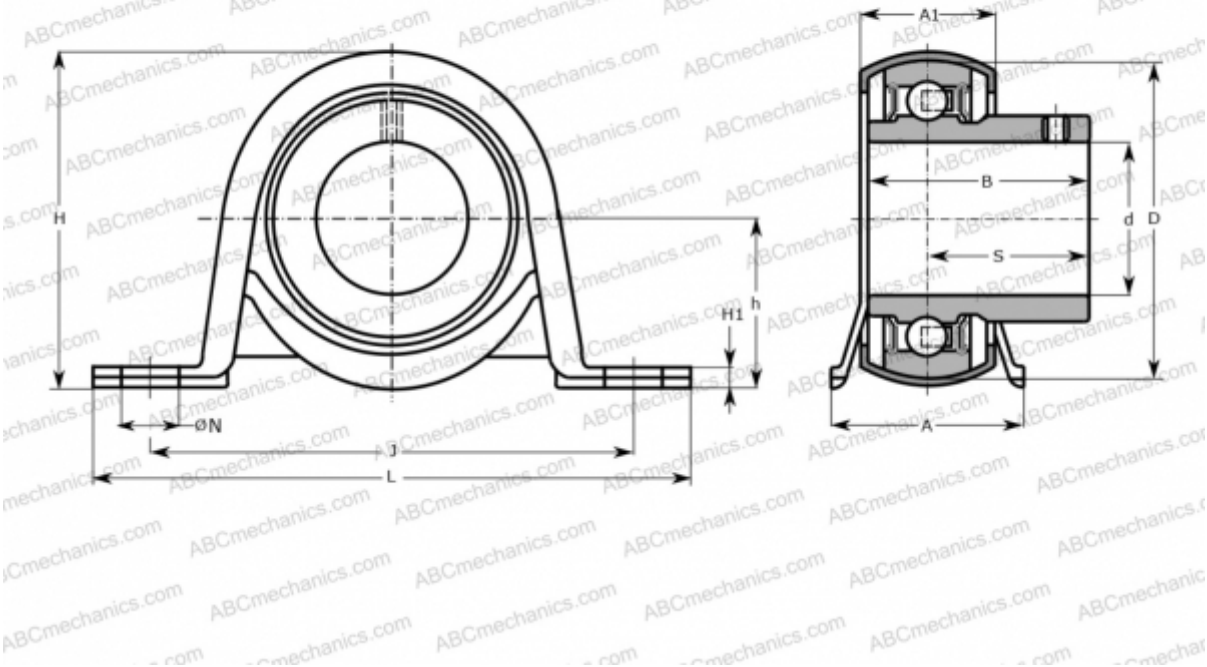

Technical specification

DIMENSIONS, MM	
d	25,000
D	52,000
B	34,100
L	108,000
H	56,000
A	32,000
J	86,000
A1	24,000
H1	3,200
N	11,200
S	19,800
h	28,300
WEIGHT, KG	0,270

Bearing	YAR 205-2F
Housing	P 52
MANUFACTURER	SKF

CALCULATION DATA	
Basic dynamic load rating, C	14,000 kN
Basic static load rating, Co	7,800 kN
Fatigue load limit, Pu	0,335 kN