P 47 R-17 RM SKF

Ball bearing units

TYPE: Housing units, Plummer block, Sheet steel housing, Radial insert ball bearing with eccentric locking collar and rubber interliner, Type P..R..RM (SKF)

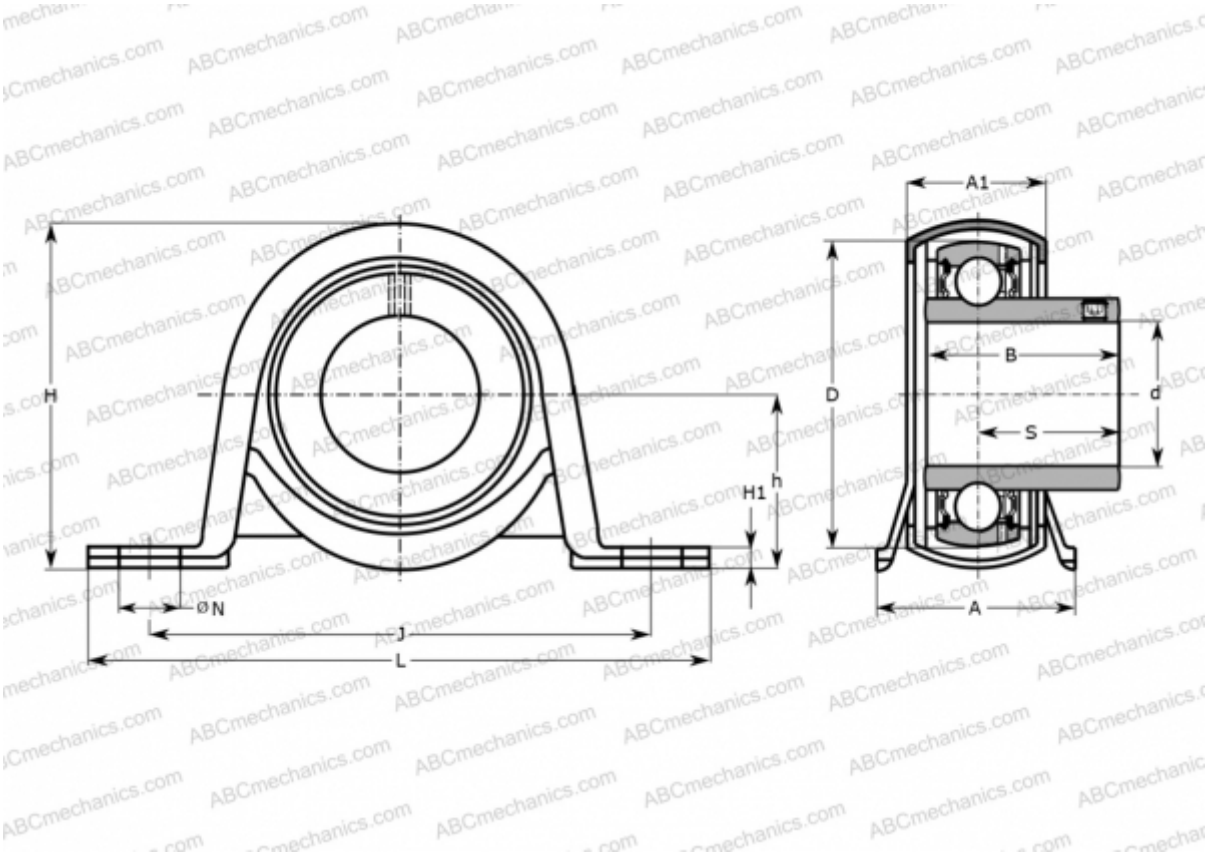

Technical specification

DIMENSIONS, MM	
d	17,000
D	40,000
B	22,100
L	99,000
H	50,000
A	32,000
J	76,000
A1	21,000
H1	3,000
N	9,600
S	15,900
h	25,200
WEIGHT, KG	0,190

Bearing	YAT 203
Housing	P 47
Seal	RIS 203
MANUFACTURER	SKF
CALCULATION DATA	
Basic dynamic load rating, C	9,560 kN
Basic static load rating, Co	4,750 kN
Fatigue load limit, Pu	0,200 kN