P 80 R-35 WF SKF

Ball bearing units

TYPE: Housing units, Plummer block, Sheet steel housing, Radial insert ball bearing with eccentric locking collar and rubber interliner, Type P..R..WF (SKF)

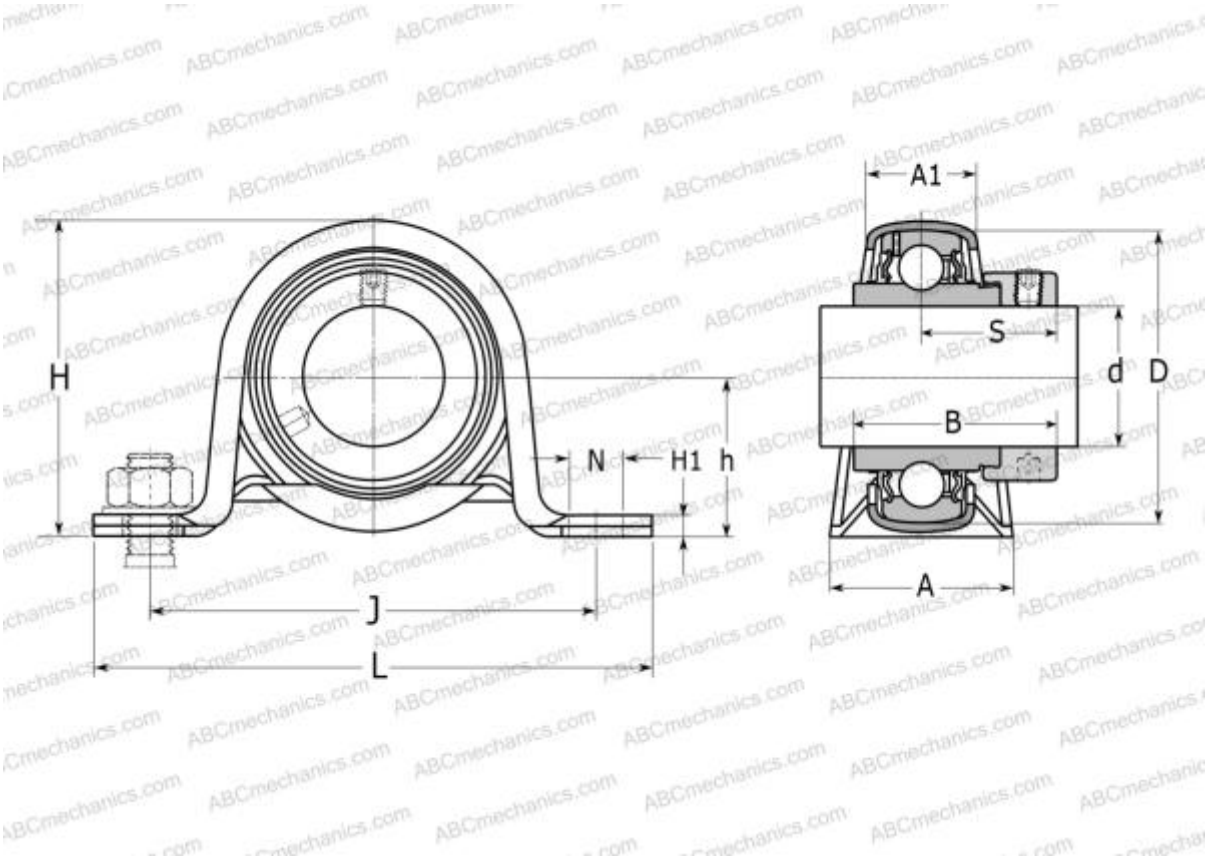

Technical specification

DIMENSIONS, MM	
d	35,000
D	35,000
B	51,100
L	148,000
H	86,000
A	43,000
J	120,000
A1	29,000
H1	5,000
N	14,000
S	32,300
h	43,500
WEIGHT, KG	0,900

Bearing	YEL 207-2F
Housing	P 80
Seal	RIS 207 A
MANUFACTURER	SKF
CALCULATION DATA	
Basic dynamic load rating, C	25,500 kN
Basic static load rating, Co	15,300 kN
Fatigue load limit, Pu	0,655 kN