FY 25 TF SKF

Ball bearing units

TYPE: Housing units, Four-bolt flanged housing units, Cast iron housing, Radial insert ball bearing with grub screws in inner ring, Type FY/FYJ..TF (SKF)

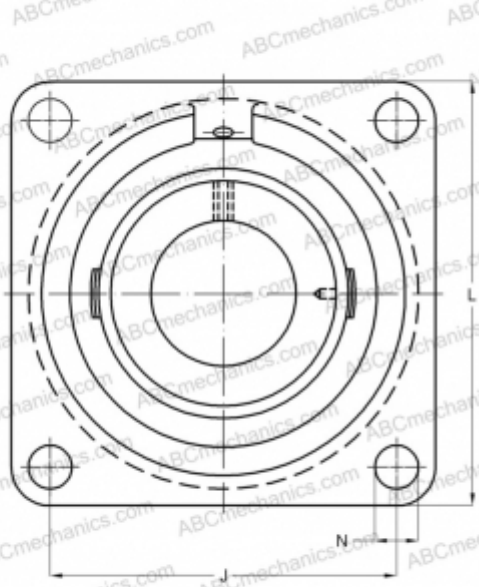

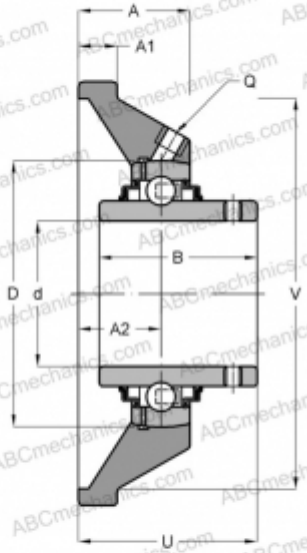

Technical specification

DIMENSIONS, MM	
d	25,000
D	25,000
B	34,100
L	95,000
A	30,000
J	70,000
A1	12,000
N	11,500
U	38,800
V	74,600
WEIGHT, KG	0,770
Bearing	YAR 205-2F
Housing	FY 505 M

Protective cover	ECY 205
MANUFACTURER	SKF

CALCULATION DATA	
Basic dynamic load rating, C	14,000 kN
Basic static load rating, Co	7,800 kN
Fatigue load limit, Pu	0,335 kN
Limiting speed	7000 r/min