# FYJ 25 TF SKF

Ball bearing units

TYPE: Housing units, Four-bolt flanged housing units, Cast iron housing, Radial insert ball bearing with grub screws in inner ring, Type FY/FYJ..TF (SKF)

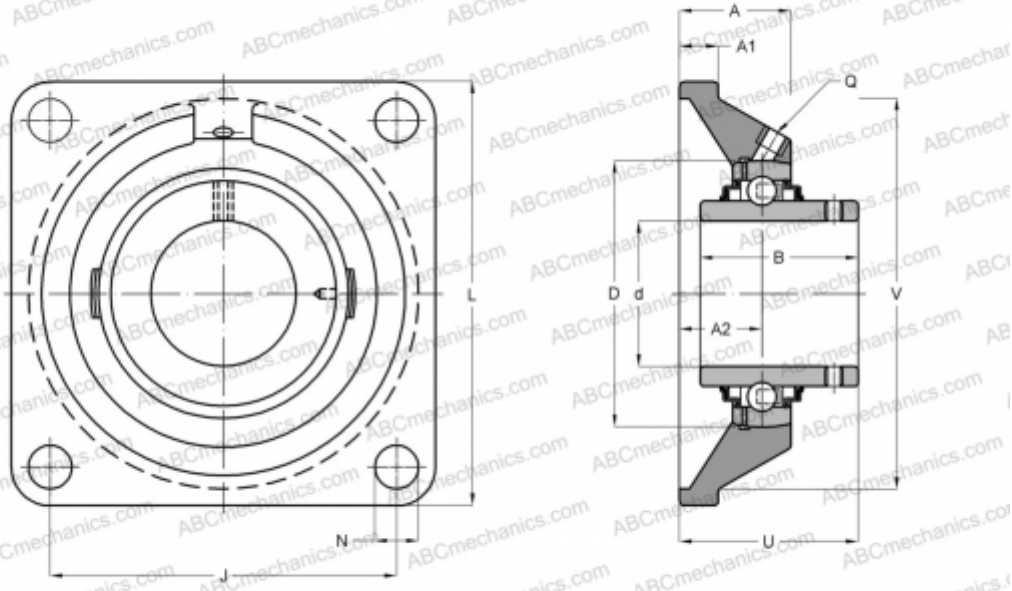


## Technical specification

| DIMENSIONS, MM | |
|---|---|
| d | 25,000 |
| D | 25,000 |
| B | 34,100 |
| L | 95,000 |
| A | 27,000 |
| J | 70,000 |
| A1 | 14,000 |
| N | 12,000 |
| U | 35,800 |
| V | 74,600 |
| **WEIGHT, KG** | 0,860 |
| Bearing | YAR 205-2F |
| Housing | FYJ 505 |

| MANUFACTURER | SKF |
|---|---|

| CALCULATION DATA | |
|---|---|
| Basic dynamic load rating, C | 14,000 kN |
| Basic static load rating, Co | 7,800 kN |
| Fatigue load limit, Pu | 0,335 kN |
| Limiting speed | 7000 r/min |