FYTB 12 TF SKF

Ball bearing units

TYPE: Housing units, Two-bolt flanged housing units, Cast iron housing, Radial insert ball bearing with grub screws in inner ring, Type FYTB/FYTJ..TF (SKF)

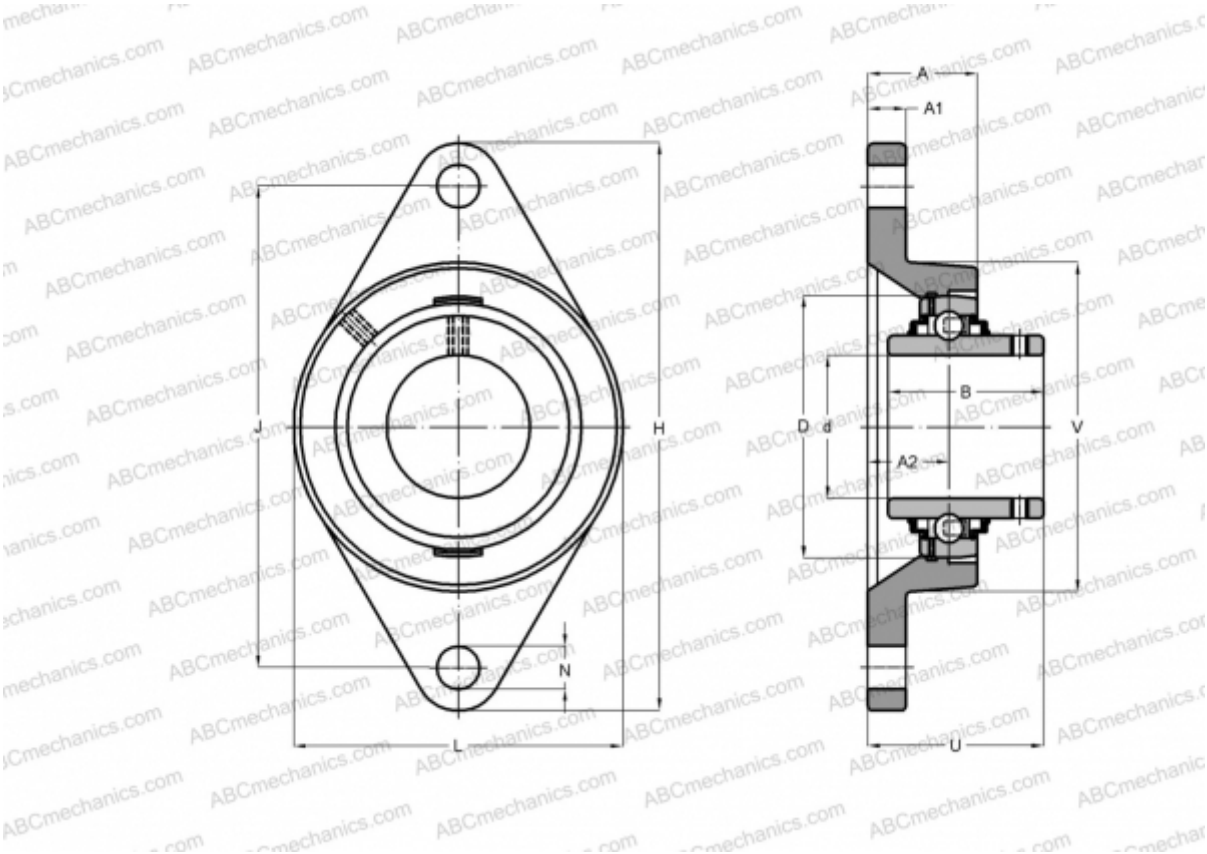

Technical specification

DIMENSIONS, MM	
d	12,000
D	40,000
B	27,400
L	57,000
H	98,500
A	26,000
J	76,500
A1	11,000
A2	17,000
N	11,500
U	32,900
V	50,800
WEIGHT, KG	0,420

Bearing	YAR 203/12-2F
Housing	FYTB 503 M
MANUFACTURER	SKF
CALCULATION DATA	
Basic dynamic load rating, C	9,560 kN
Basic static load rating, Co	4,750 kN
Fatigue load limit, Pu	0,200 kN
Limiting speed	9500 r/min