FYTB 30 TF SKF

Ball bearing units

TYPE: Housing units, Two-bolt flanged housing units, Cast iron housing, Radial insert ball bearing with grub screws in inner ring, Type FYTB/FYTJ..TF (SKF)

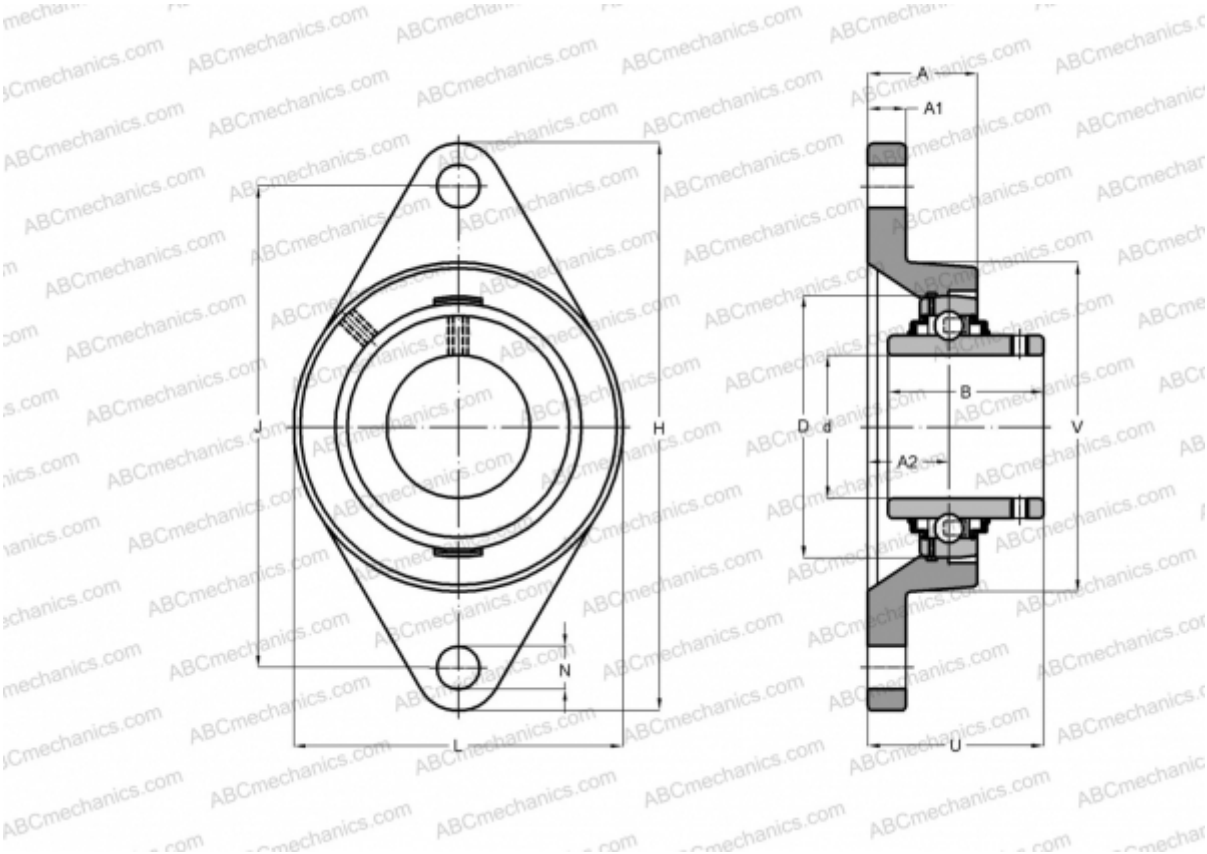

Technical specification

DIMENSIONS, MM	
d	30,000
D	62,000
B	38,100
L	83,000
H	141,500
A	32,500
J	116,500
A1	13,000
A2	20,000
N	11,500
U	42,200
V	76,200
WEIGHT, KG	0,930

Bearing	YAR 206-2F
Housing	FYTB 506 M
Protective cover	ECY 206
MANUFACTURER	SKF
CALCULATION DATA	
Basic dynamic load rating, C	19,500 kN
Basic static load rating, Co	11,200 kN
Fatigue load limit, Pu	0,475 kN
Limiting speed	6300 r/min