FYTB 20 WF SKF

Ball bearing units

TYPE: Housing units, Two-bolt flanged housing units, Cast iron housing, Radial insert ball bearing with eccentric locking collar, Type FYTB..WF (SKF)

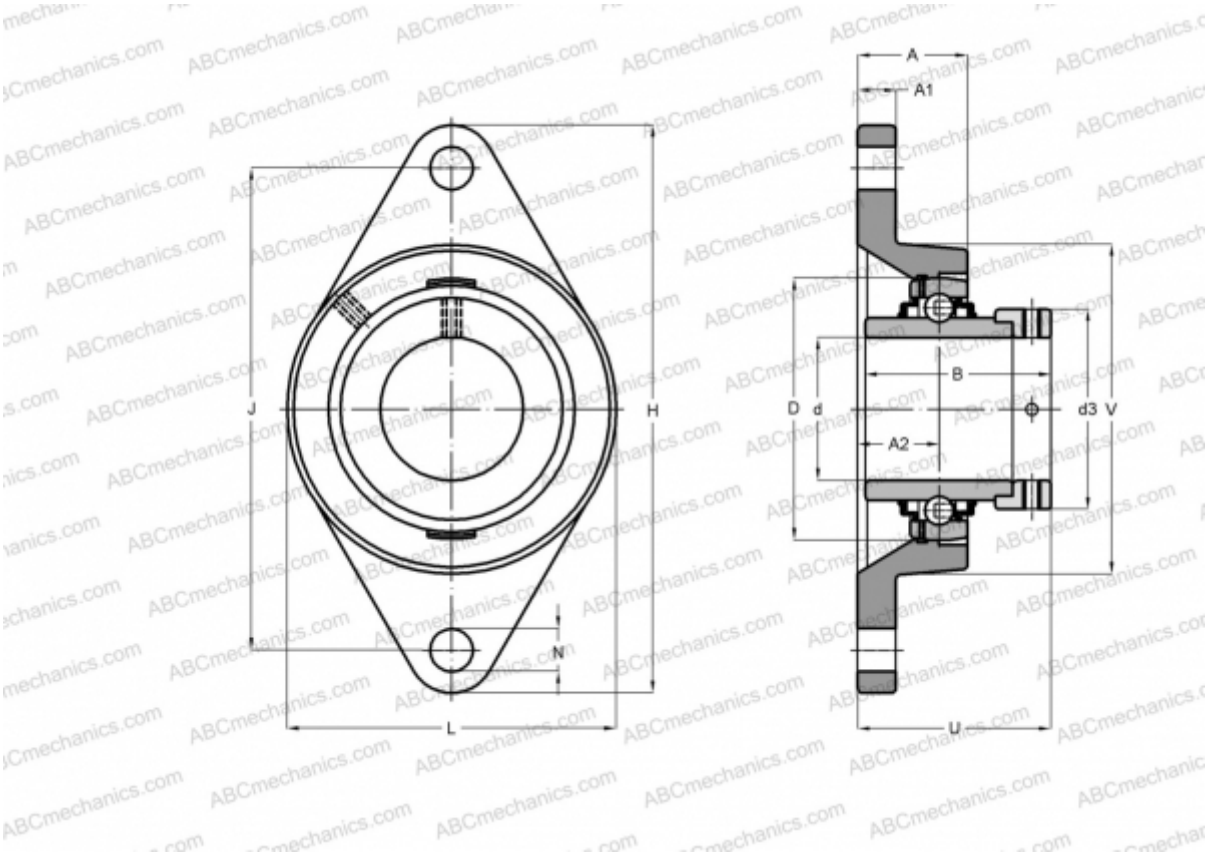

Technical specification

DIMENSIONS, MM	
d	20,000
D	47,000
B	43,700
L	60,500
H	112,000
A	29,500
J	90,000
A1	11,000
A2	26,600
N	11,500
d3	32,400
U	45,600
V	50,800
WEIGHT, KG	0,550

Bearing	YEL 204-2F
Housing	FYTB 504 M
Protective cover	ECY 204
MANUFACTURER	SKF
CALCULATION DATA	
Basic dynamic load rating, C	12,700 kN
Basic static load rating, Co	6,550 kN
Fatigue load limit, Pu	0,280 kN
Limiting speed	8500 r/min