FYC 50 TF SKF

Ball bearing units

TYPE: Housing units, Four-bolt flanged housing units, Cast iron housing, Radial insert ball bearing with grub screws in inner ring, Type FYC..TF (SKF)

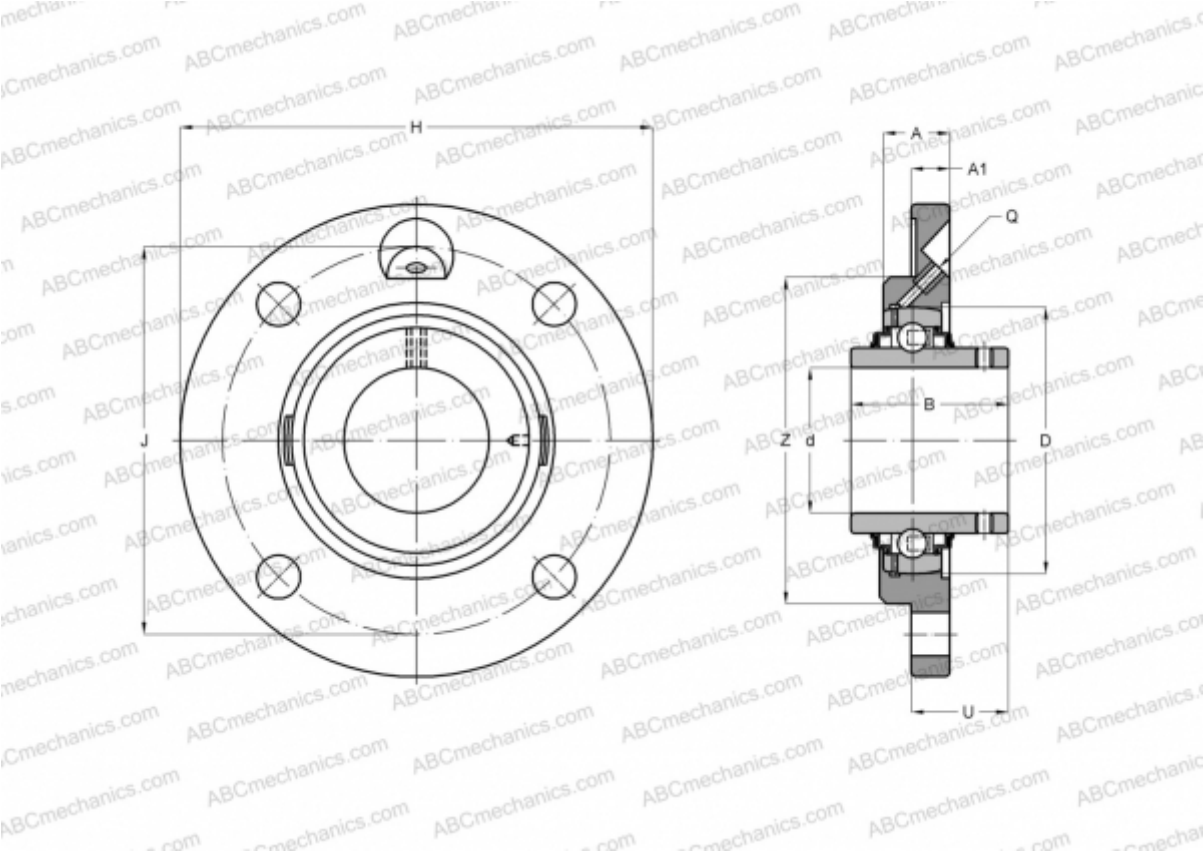

Technical specification

DIMENSIONS, MM	
d	50,000
D	90,000
B	51,600
H	165,000
A	40,000
J	138,000
A1	14,000
U	42,600
Z	110,000

WEIGHT, KG	2,800
Bearing	YAR 210-2F
Housing	FYC 510

MANUFACTURER	SKF

CALCULATION DATA	
Basic dynamic load rating, C	35,100 kN
Basic static load rating, Co	23,200 kN
Fatigue load limit, Pu	0,980 kN
Limiting speed	4000 r/min